1.5PE

Aluminiumgear pumps

Technical Catalogue

E0.109.0219.02.00IM03

salami®

GEAR PUMPS

SALAMI gear pumps are available with displacements from 1.4 cm3/rev to 99 cm3/rev *(from 0.09 cu.in/rev to 6.03 cu.in/rev).*
Multiple pumps can always be relized combining stages taken from different or same series.
Several options of shafts, flanges and ports as for European, German and American standards are available for all the pumps.
SALAMI gear pumps offer:
•High volumetric efficiency thanks to an innovative design and an accurate control of machining tolerances.
•Axial compensation achieved by the use of floating bushes that allow high volumetric efficiency throughout the working pressure range.
•DU bearings to ensure high pressure capability.
•12 teeth integral gear and shaft.
•Aluminium body.
•Cast iron flange and cover.
•Double shaft seals.
•Nitrile seals as standard and Viton seals in high temperature applications.
•All pumps are hydraulically tested after assembly to ensure the highest standard performance.
•Gear pumps are ideal for mobile equipment including: snow plows, light duty equipment, farm vehicles, town trucks, cherry pickers, lift gates, utility vehicles, aerial devices, hoists, spreaders, fan drive.
•Also available Bidirectional rotation.

WORKING CONDITIONS

- Pump inlet pressure (absolute pressure)	0.8 to 1.5 bar *(11.6 to 21.7 psi)* 12 mm2 / sec
- Minimum operating fluid viscosity	800 mm2 / sec
- Max starting viscosity	17 - 65 mm2 / sec
- Suggested fluid viscosity range	-20 to 80 °C
- Fluid operating temperature range	-15 to 110°C
- Fluid operating temperature range with FPM seals (Viton)	-30 to 110°C
- Fluid operating temperature range with HNBR seals*	Mineral oil according to DIN 51524.
- Hydraulic fluid *Available on request	Other hydraulic fluids on request.

DEFINITION OF PRESSURES

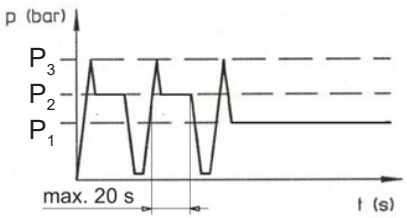

P3 ≡ Peak pressure
P2 ≡ Intermittent operating pressure (1/3 of working time)
P1 ≡ Continuous operating pressure

P

P

E0.100.0821.02.00IM03

DRIVE SHAFTS

Radial and axial loads on the shafts must be avoided since they reduce the life of the unit.
In order to avoid misalignment during the assembly with the primary engine, a connection with “Oldham” coupling (or coupling having convex toothed hub) is recommended.

ROTATION

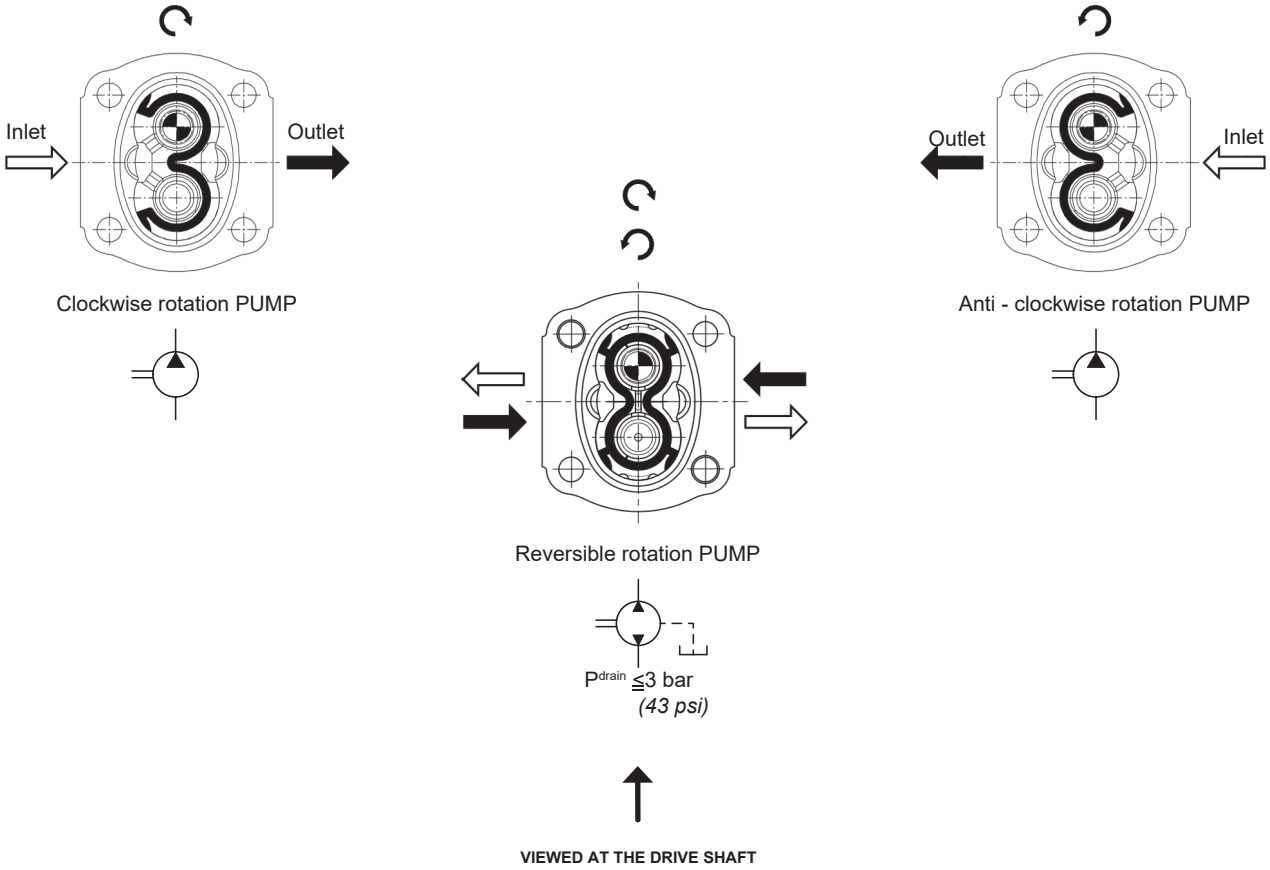

HYDRAULIC PIPE LINE

To ensure favorable suction conditions it is important to keep pressure drop in suction pipe line to a minimum value (see TECHNICAL DATA).
To calculate hydraulic pipe line size, the designer can use; as an approximate guide, the following fluid speed figures:

From 1 to 2 m/sec on suction pipe line
From 6 to 10 m/sec on pressure pipe line

From *3.28* to *6.36 ft/sec* on suction pipe line
From *19.7* to *32.8 ft/sec*on pressure pipe line

The lowest fluid speed values in pipe lines is recommended when the operating temperature range is high and/or for continuos duty.
The highest value is recommended when the temperature difference is low and/or for intermittent duty.
When tandem pumps are supplied by 2 different reservoirs with 2 different fluids it is necessary to specify “AS” version.

E0.100.0821.02.00IM03

FILTRATION INDEX RECOMMENDED

Working pressure	>200 bar/2900 psi	<200 bar/2900 psi
Contamination class NAS 1638	9	10
Contamination class ISO 4406	19/18/15	20/19/16
Achieved with filter βx=75	15 µm	25 µm

COMMON FORMULAS FOR PUMPS

C = Input torque $= \dfrac{q \cdot \Delta p}{62.8 \cdot \eta_m}$ (Nm)

P = Input power $= \dfrac{q \cdot n \cdot \Delta p \; 10^{-3}}{600 \; \eta_m}$ (kW)

Q = Outlet flow $= \dfrac{q \cdot n \cdot \eta_v}{1000}$ (l/min)

LEGENDA

Δp = Working pressure (bar)

q = Displacement (cm^3/rev)

n = Speed (min^{-1})

η_m = Mechanical eff. (0.92)

η_v = Volumetric eff. (0.95)

IDENTIFICATION LABEL

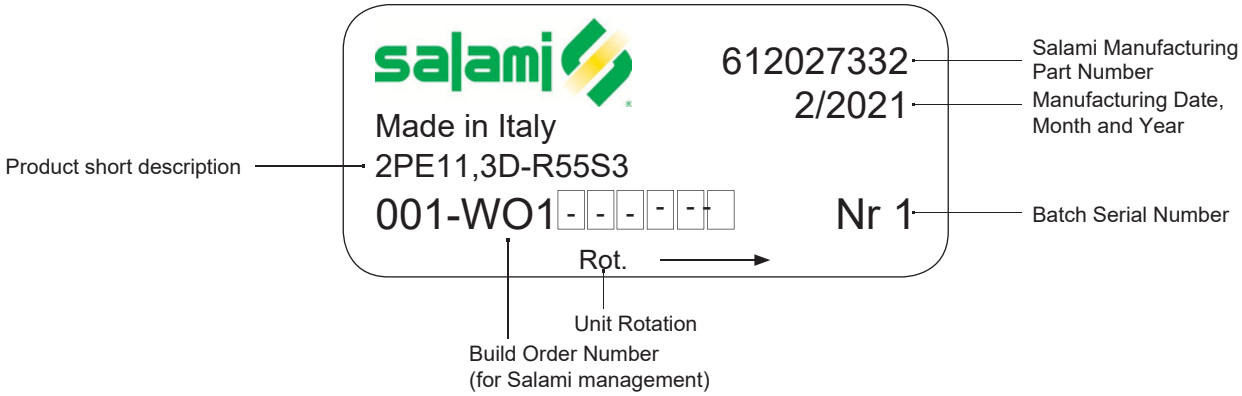

TECHNICAL DATA

	Displacement		Continuous pressure P1		Intermittent pressure P2		Peak pressure P3		Max. speed	Min. speed
GROUP 1.5 - E SERIES	cm3/rev	*cu.in/rev*	bar	*psi*	bar	*psi*	bar	*psi*	rpm	
1.5PE - 1.4	1.4	*0.09*	250	*3625*	270	*3915*	290	*4205*	5000	700
1.5PE - 2.1	2.1	*0.13*	250	*3625*	270	*3915*	290	*4205*	5000	700
1.5PE - 2.8	2.8	*0.17*	250	*3625*	270	*3915*	290	*4205*	4500	700
1.5PE - 3.5	3.5	*0.21*	250	*3625*	270	*3915*	290	*4205*	4500	700
1.5PE - 4.1	4.1	*0.25*	250	*3625*	270	*3915*	290	*4205*	4000	700
1.5PE - 5.2	5.2	*0.32*	230	*3335*	250	*3625*	270	*3915*	4000	700
1.5PE - 6.2	6.2	*0.38*	230	*3335*	250	*3625*	270	*3915*	3600	600
1.5PE - 7.6	7.6	*0.46*	200	*2900*	220	*3190*	250	*3625*	3300	600
1.5PE - 9.3	9.3	*0.57*	180	*2610*	200	*2900*	240	*3480*	3000	600
1.5PE - 11	11	*0.67*	170	*2465*	190	*2755*	220	*3190*	3000	600

GROUP 2 - E SERIES	cm3/rev	*cu.in/rev*	bar	*psi*	bar	*psi*	bar	*psi*	rpm	
2PE - 3.2*	3.2	*0.19*	250	*3625*	280	*4060*	300	*4350*	4000	600
2PE - 3.9*	3.9	*0.24*	250	*3625*	280	*4060*	300	*4350*	4000	600
2PE - 4.5	4.6	*0.27*	250	*3625*	280	*4060*	300	*4350*	4000	600
2PE - 6.5	6.5	*0.4*	250	*3625*	280	*4060*	300	*4350*	4000	600
2PE - 8.3	8.2	*0.5*	250	*3625*	280	*4060*	300	*4350*	3500	500
2PE - 10.5	10.6	*0.65*	250	*3625*	280	*4060*	300	*4350*	3500	500
2PE - 11.3	11.5	*0.68*	250	*3625*	280	*4060*	300	*4350*	3500	500
2PE - 12.5	12.7	*0.77*	250	*3625*	280	*4060*	300	*4350*	3500	500
2PE - 13.8	13.8	*0.84*	250	*3625*	280	*4060*	300	*4350*	3500	500
2PE - 16	16.6	*1.01*	250	*3625*	280	*4060*	300	*4350*	3000	400
2PE - 19	19.4	*1.15*	220	*3190*	240	*3480*	260	*3750*	3000	400
2PE - 22.5	22.9	*1.37*	200	*2900*	220	*3190*	240	*3480*	2750	400
2PE - 26	26.6	*1.62*	180	*2610*	200	*2900*	220	*3190*	2500	400

*Available only as rear pump

GROUP 2.5 - B SERIES	cm3/rev	*cu.in/rev*	bar	*psi*	bar	*psi*	bar	*psi*	rpm	
2.5PB - 5.5*	5.97	*0.36*	250	*3625*	280	*4060*	300	*4350*	3000	600
2.5PB - 8.3*	8.29	*0.50*	250	*3625*	280	*4060*	300	*4350*	3000	600
2.5PB - 11.5*	11.76	*0.72*	250	*3625*	280	*4060*	300	*4350*	3000	600
2.5PB - 13.8*	14.07	*0.86*	250	*3625*	280	*4060*	300	*4350*	3000	600
2.5PB - 16	16	*0.97*	250	*3625*	280	*4060*	300	*4350*	3000	600
2.5PB - 19	19.3	*1.17*	250	*3625*	280	*4060*	300	*4350*	3000	600
2.5PB - 22	22.2	*1.35*	250	*3625*	280	*4060*	300	*4350*	3000	500
2.5PB - 25	25.2	*1.53*	250	*3625*	280	*4060*	300	*4350*	3000	500
2.5PB - 28	27.6	*1.68*	250	*3625*	280	*4060*	300	*4350*	3000	500
2.5PB - 32	32.4	*1.97*	230	*3335*	250	*3625*	260	*3750*	3000	500
2.5PB - 38	38.1	*2.32*	200	*2900*	220	*3190*	240	*3480*	2750	400
2.5PB - 44	44.2	*2.69*	170	*2465*	190	*2755*	210	*3040*	2500	400

*Available only as rear pump. Displacements **11.5-13.8** are available as single pump only with drive shaft “55”.

E0.100.0821.02.00IM03

TECHNICAL DATA

	Displacement		Continuous pressure P1		Intermittent pressure P2		Peak pressure P3		Max. speed	Min. speed
GROUP 3 - E SERIES	cm3/rev	*cu.in/rev*	bar	*psi*	bar	*psi*	bar	*psi*	rpm	
3PE - 21	20.6	*1.26*	250	*3625*	280	*4060*	300	*4350*	3000	600
3PE - 27	27	*1.65*	250	*3625*	280	*4060*	300	*4350*	3000	600
3PE - 33	33.5	*2.04*	250	*3625*	280	*4060*	300	*4350*	3000	600
3PE - 38	38.7	*2.36*	250	*3625*	280	*4060*	300	*4350*	2750	500
3PE - 46	46.9	*2.86*	250	*3625*	270	*3915*	280	*4060*	2750	500
3PE - 55	54.1	*3.3*	220	*3190*	240	*3480*	250	*3625*	2500	400
3PE - 65	63.1	*3.85*	200	*2900*	220	*3190*	240	*3480*	2500	400
3PE - 75	73.4	*4.48*	180	*2610*	200	*2900*	220	*3190*	2500	400

GROUP 3.5 - C SERIES	cm3/rev	*cu.in/rev*	bar	*psi*	bar	*psi*	bar	*psi*	rpm	
3.5PC - 55	54.8	*3.34*	250	*3625*	280	*4060*	300	*4350*	2750	400
3.5PC - 64	63.2	*3.85*	250	*3625*	280	*4060*	300	*4350*	2750	350
3.5PC - 75	74.7	*4.55*	230	*3335*	250	*3625*	280	*4060*	2500	300
3.5PC - 87	88	*5.36*	210	*3040*	230	*3330*	260	*3750*	2250	300
3.5PC - 98*	99	*6.03*	200	*2900*	220	*3190*	250	*3625*	2000	300

*Displacement 98 are special release, please contact sales department.

Max Speed must be lowered by 10% for system working continuosly at p1 pressure.
Max pressure must be lowered by10% for bi-directional pump.

ROTATION CHANGING INSTRUCTIONS FOR UNITS

Keep the working surface cleaned as well as the exterior of the pump before starting and avoid inner contamination of the pump. The pump shown below is a clockwise rotating pump.
To achieve anti - clockwise rotation, please read the following instructions carefully.

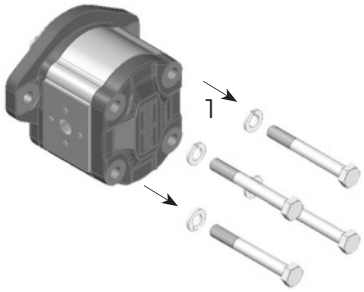

1 - Loosen and fully unscrew the bolts. **2** - Lay the pump on the working area in order to have the mounting flange turned upside. **3** - Coat the shaft end with grease to avoid damaging the shaft seal. **4** - Remove the flange and lay it on the working area; verify that the seal is correctly located in the body seat.

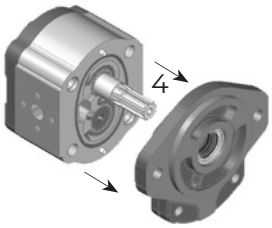

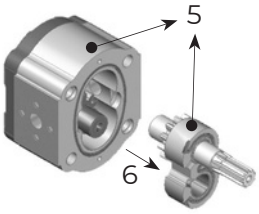

5 - Mark the position of the bushing and eventually of the thrust plate, as well, with reference to the body.
6 - Remove the bushing, thrust plate and the driving gear taking care to avoid driven gear axial shifts.

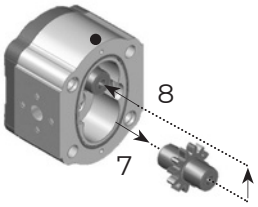

7 - Draw out the driven gear from its housing, taking care to avoid rear cover axial shifts.
8 - Re-locate the driven gear in the position previously occupied by the driving gear.

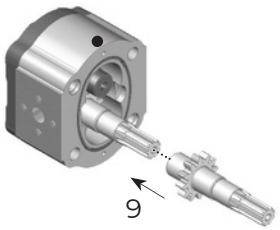

9 - Re-locate the driving gear in the position previously occupied by the driven gear.

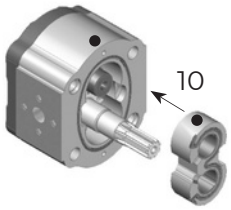

10 - Replace the bushing and thrust plate taking care that:
- marks are located as on the picture
- surface containing the seal is visible
- seal and its protection are correctly located.

11 - Clean the body and mounting flange facing surfaces.
12 - Verify that the two plugs are located in the body.
13 - Refit the mounting flange, turned 180° from its original position.
14 - Replace the bolts and tighten clockwise evenly to an appropriate torque.
15 - Check that the shaft rotates freely.
16 - Mark on the flange the new direction of rotation.

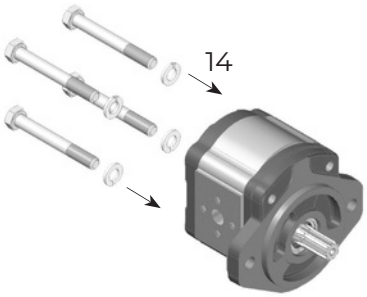

E0.100.0821.02.00IM03

INDEX

Final revised edition - February 2019

SHAFTS AND FLANGES COMBINATION

1.5PE	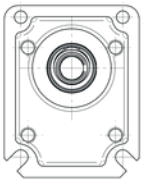 CODE **P0** - (Ø25,4 mm) European standard	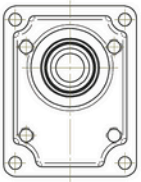 CODE **P01** - (Ø30 mm) European standard	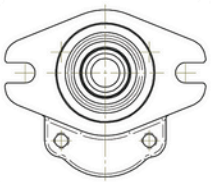 CODE **S0** - SAE AA 2 bolts	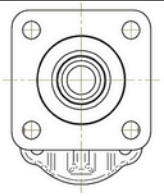 CODE **S1** - SAE AA 4 bolts
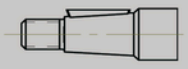 CODE **18** - Tapered 1:8	18P0			
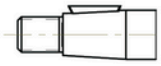 CODE **19** - Tapered 1:8		19P01		
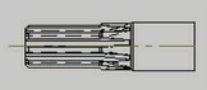 CODE **51** - SAE A Splined 9T			51S0	
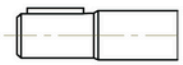 CODE **80** - SAE AA Parallel Ø12,7			80S0	
 CODE **83** - SAE Parallel Ø12,7				83S1

E0.109.0219.02.00IM02

Displacements up to 0.67 cu.in./rev
Pressure up to 4205 psi

GEAR PUMPS

Displacements up to 11 cm3/rev
Pressure up to 290 bar

ASSEMBLING DIMENSIONS AND WORKING CONDITIONS

Type			1.4	2.1	2.8	3.5		5.2	6.2	7.6	9.3	11
Displacement		cm3/rev	1.4	2.1	2.8	3.5		5.2	6.2	7.6	9.3	11
		cu.in./rev	*0.09*	*0.13*	*0.17*	*0.21*		*0.32*	*0.38*	*0.46*	*0.57*	*0.67*
Dimension A		mm	44	45.9	47.9	49.9		54.7	57.5	61.5	66.3	71.1
		in	*1.73*	*1.81*	*1.89*	*1.96*		*2.15*	*2.26*	*2.42*	*2.61*	*2.80*
Dimension C		mm	22	22.95	23.95	24.95		27.35	28.75	30.75	33.15	35.55
		in	*0.87*	*0.90*	*0.94*	*0.98*		*1.08*	*1.13*	*1.21*	*1.31*	*1.40*
Continuous pressure*	P1	bar	250	250	250	250		230	230	200	180	170
		psi	*3625*	*3625*	*3625*	*3625*		*3335*	*3335*	*2900*	*2610*	*2465*
		bar	270	270	270	270		250	250	220	200	190
		psi	*3615*	*3615*	*3615*	*3615*		*3625*	*3625*	*3190*	*2900*	*2755*
Intermittent pressure	P2	bar	290	290	290	290		270	270	250	240	220
		psi	*4205*	*4205*	*4205*	*4205*		*3915*	*3915*	*3925*	*3480*	*3190*
Peak pressure	P3	bar										
		psi										
Max speed		rpm	5000	5000	4500	4500	4000	4000	3600	3300	3000	3000
Min speed		rpm	700	700	700	700	700	700	600	600	600	600
Weight		kg	1.25	1.27	1.30	1.34	1.37	1.42	1.45	1.52	1.59	1.66
		lbs	*2.76*	*2.80*	*2.87*	*2.94*	*3.02*	*3.13*	*3.20*	*3.35*	*3.50*	*3.66*

* F o r w orking conditions, using exclusively pressure P1, the value of max. speed must be reduced of 10%.

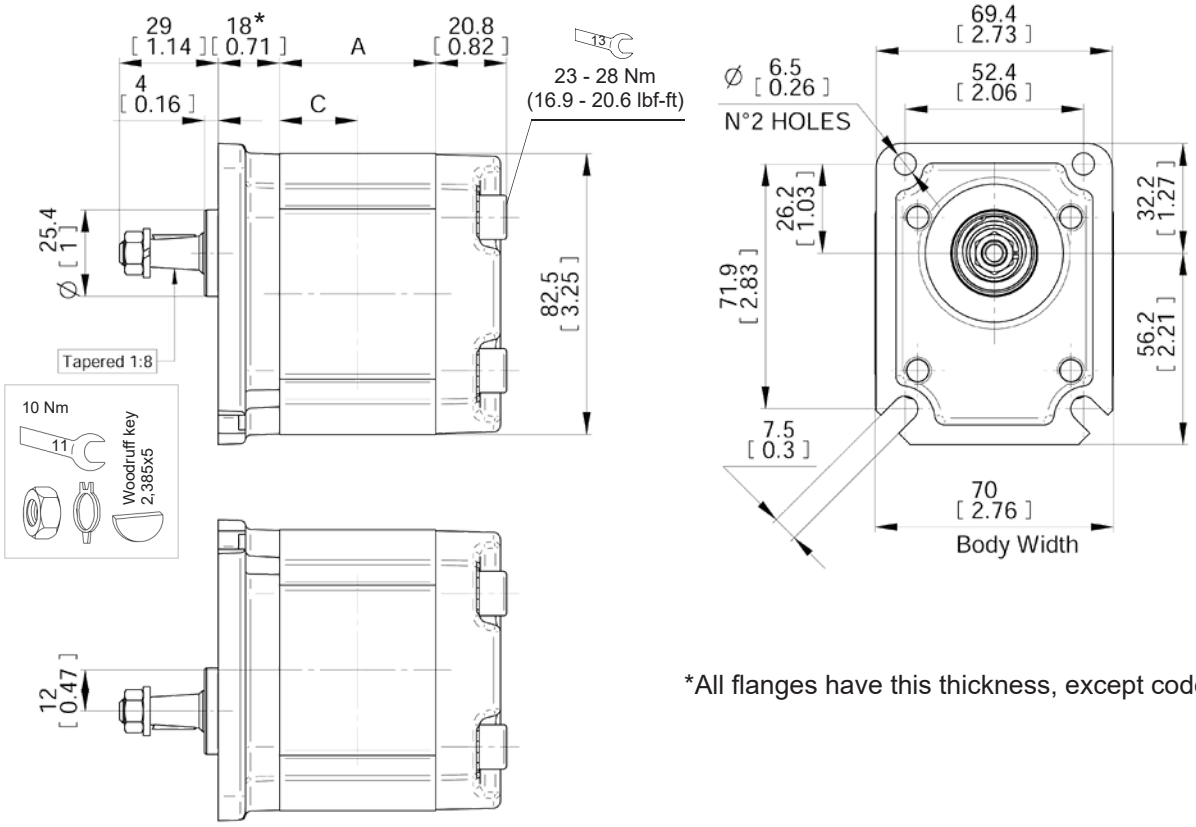

*All flanges have this thickness, except code S1.

E0.109.0219.02.00IM03

FLANGED AND THREADED PORTS

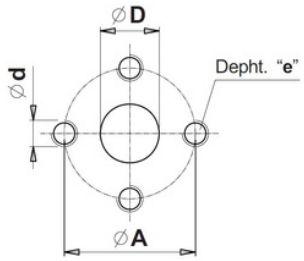

code P

Flanged ports
european standard

UNI-DIRECTIONAL PUMP	TYPE	INLET				OUTLET			
		Ø D	Ø A	d	e	Ø D	Ø A	d	e
	From 1.4 to 11	12 *(0.47")*	30 *(1.18")*	M6	13 *(0.51")*	12 *(0.47")*	30 *(1.18")*	M6	13 *(0.51")*

BI-DIRECTIONAL PUMPS Special version available on request.

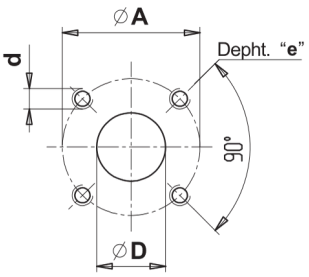

code B

Flanged ports
german standard

UNI-DIRECTIONAL PUMP	TYPE	INLET				OUTLET			
		Ø D	Ø A	d	e	Ø D	Ø A	d	e
	From 1.4 to 11	12 *(0.47")*	30 *(1.18")*	M6	13 *(0.51")*	12 *(0.47")*	30 *(1.18")*	M6	13 *(0.51")*

BI-DIRECTIONAL PUMPS Special version available on request.

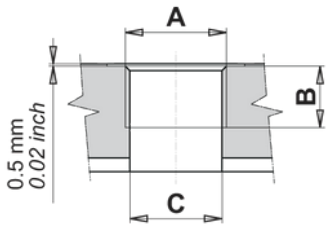

code G

Threaded ports
GAS (BSPP)

UNI-DIRECTIONAL PUMP	TYPE	INLET			OUTLET		
		A	B	C	A	B	C
	From 1.4 to 6.2	G1/2	15 *(0.59")*	18 *(0.71")*	G3/8	13 *(0.51")*	13 *(0.51")*
	From 7.6 to 11				G1/2	15 *(0.59")*	

BI-DIRECTIONAL PUMPS Special version available on request.

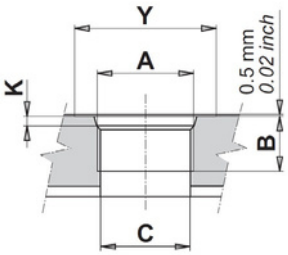

code R

Threaded ports
SAE (ODT)

UNI-DIRECTIONAL PUMP	TYPE	INLET					OUTLET				
		A	B	C	Y	K	A	B	C	Y	K
	From 1.4 to 6.2	3/4 -16 UNF (SAE 8)	14.5 *(0.57")*	13 *(0.51")*	30 *(1.18")*	2.5 *(0.10")*	9/16 - 18 UNF (SAE6)	13 *(0.51")*		25 *(0.98")*	2.5 *(0.10")*
	From 7.6 to 11	7/8 -14 UNF (SAE10)	16.7 *(0.66")*	20 *(0.79")*	34 *(1.34")*	2.5 *(0.10")*	3/4 -16 UNF (SAE8)	14.5 *(0.57")*	15 *(0.59")*	30 *(1.18")*	

BI-DIRECTIONAL PUMPS Special version available on request.

E0.109.0219.02.00IM02

DRIVE SHAFTS

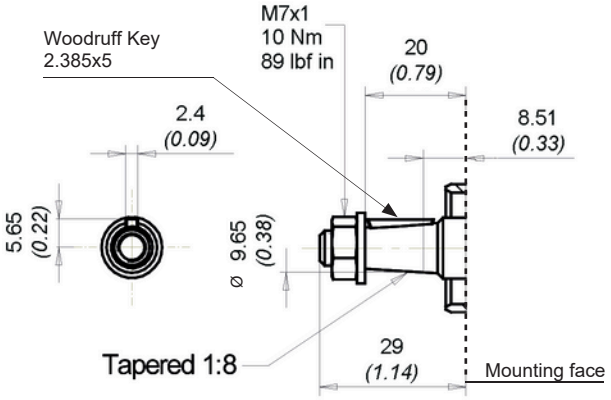

code 18	Max torque 20 Nm (177 lbf in)
EuropeanTapered 1:8	

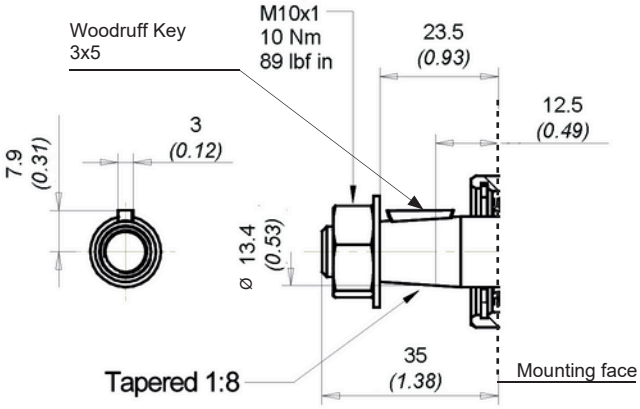

code 19	Max torque 60 Nm (531 lbf in)
EuropeanTapered 1:8	

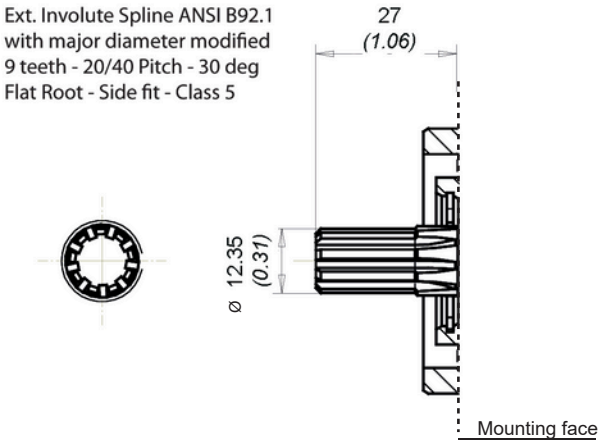

code 51	Max torque 50 Nm (442 lbf in)
SAEASpline 9T	

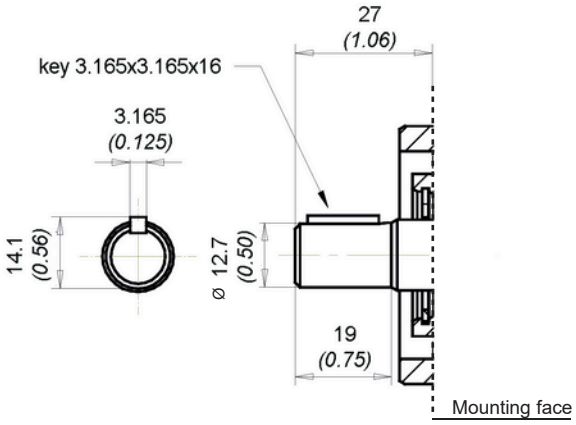

code 80	Max torque 40 Nm (354 lbf in)
SAE AA Parallel	

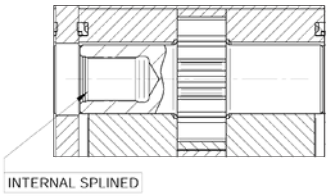

code 59	Max torque 30 Nm (266 lbt in)
DIN 5480 internal splined (only for rear pumps)	

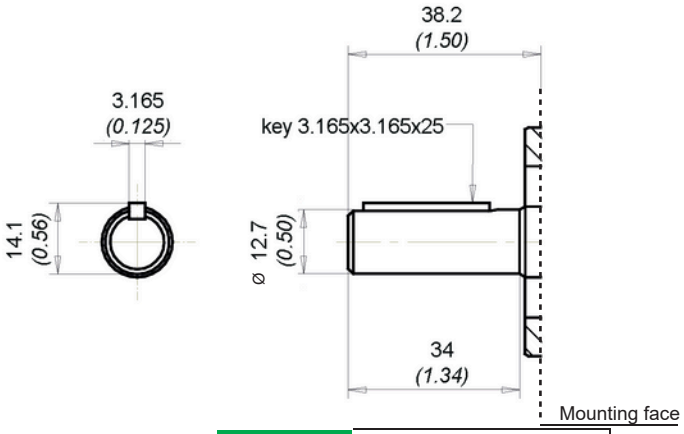

code 83	Max torque 40 Nm (354 lbf in)
SAE Parallel	

E0.109.0219.02.00IM03

MOUNTING FLANGES

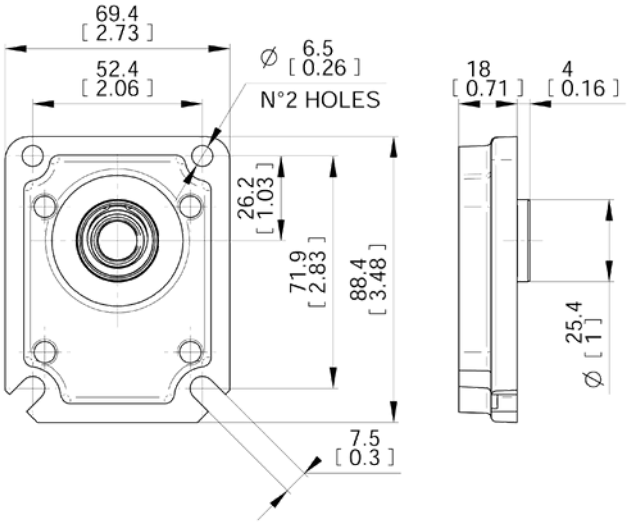

P0	European standard
With shaft code 18	

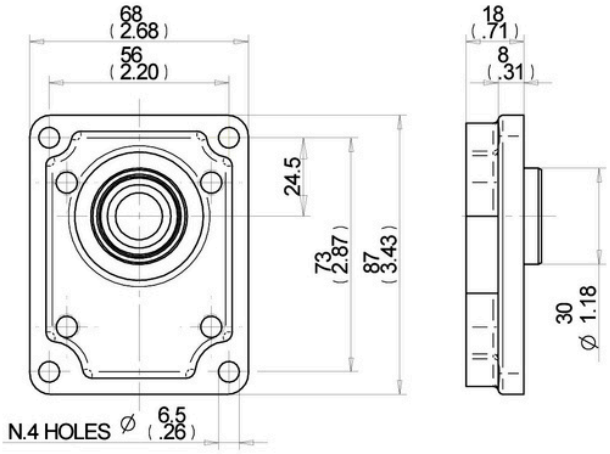

P01	European standard
With shaft code 19	

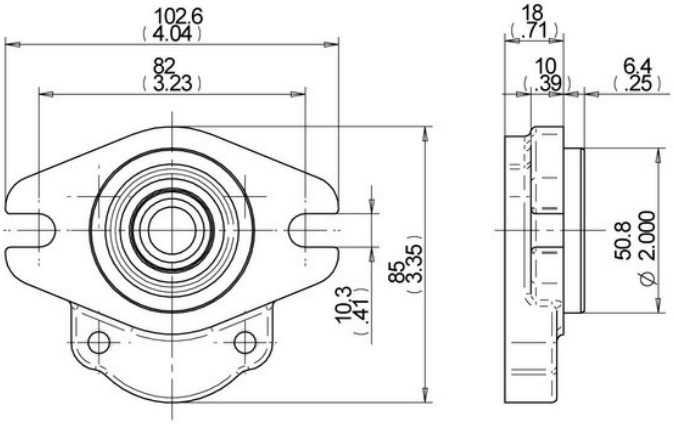

S0	SAE AA 2 bolts
With shaft code 51-80	

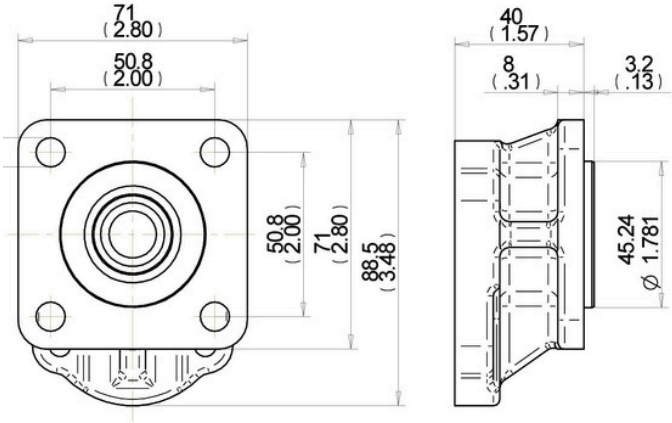

S1	SAE AA 4 bolts
With shaft code 83	

E0.109.0219.02.00IM02

REAR COVERS WITH RELIEF VALVE

code VS

With main relief valve
with internal unloading line.
Rear cover with fixed setting main relief valve.
Available values of fixed setting from 20 bar to 250 bar/*290 psi-3625 psi*
(Standard setting are multiple of 10 bar).

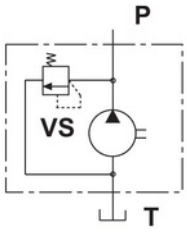

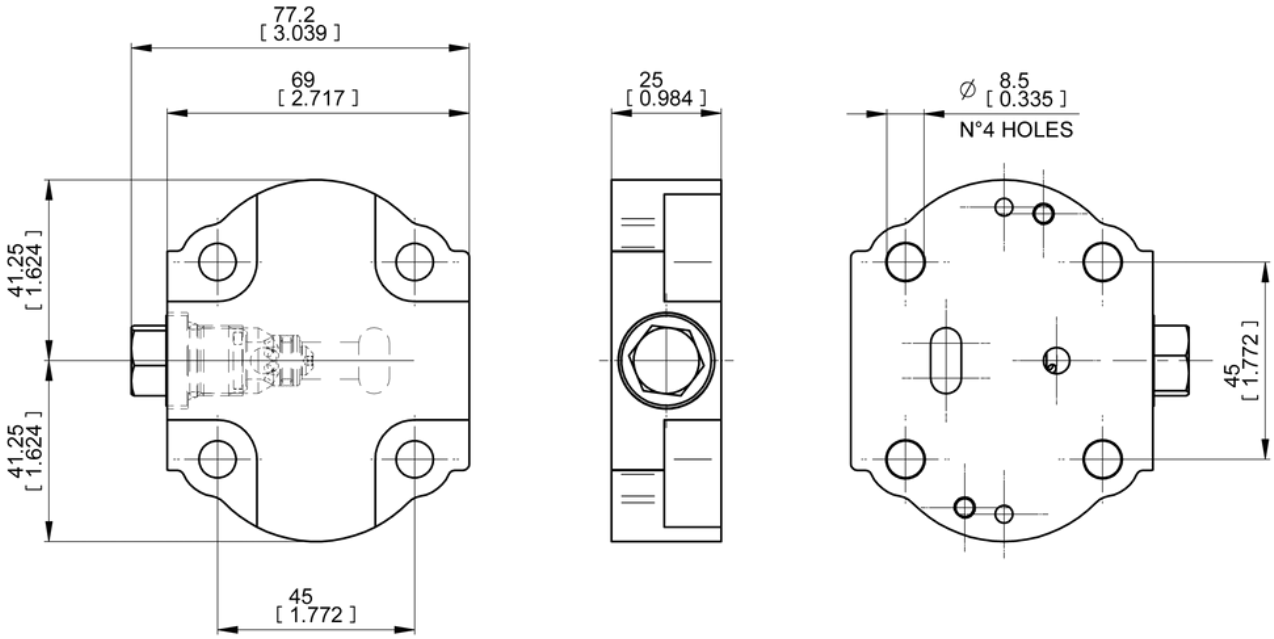

E0.109.0219.02.00IM03

MULTIPLE GEAR PUMPS ASSEMBLING DIMENSIONS

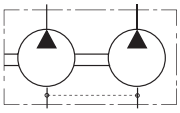

MULTIPLE GEAR PUMPS with inlet port on each body

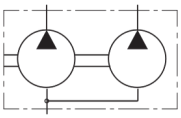

MULTIPLE GEAR PUMPS with common inlet port*

*In case of common inlet port, to avoid too high value of oil speed, 12 l/min is the max sucked flow for the downstream pump.

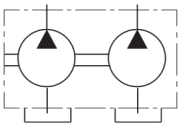

MULTIPLE GEAR PUMPS with separated stages

code AS

Type		1.4	2.1	2.8	3.5	4.1	5.2	6.2	7.6	9.3	11
Dimension A	mm	44	45.9	47.9	49.9	51.6	54.7	57.5	61.5	66.3	71.1
	in	*1.73*	*1.81*	*1.89*	*1.96*	*2.03*	*2.15*	*2.26*	*2.42*	*2.61*	*2.80*
Dimension C	mm	22	22.95	23.95	24.95	25.80	27.35	28.75	30.75	33.15	35.55
	in	*0.87*	*0.90*	*0.94*	*0.98*	*1.02*	*1.08*	*1.13*	*1.21*	*1.31*	*1.40*

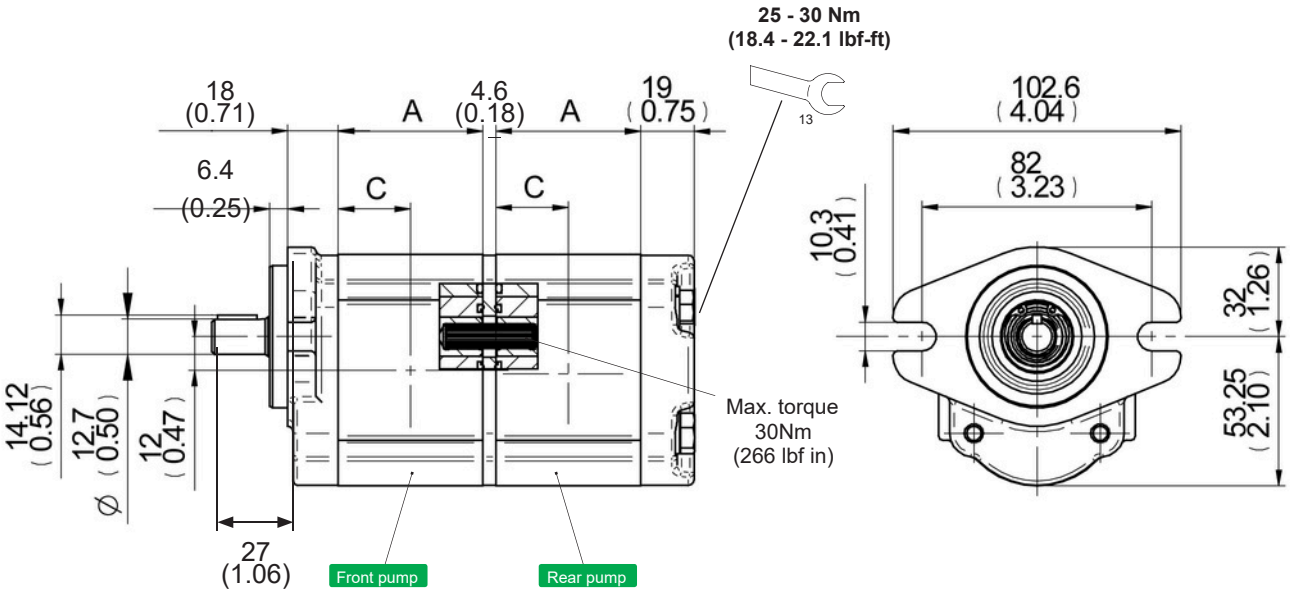

This is a Salami standard pump, alla drive shafts have a splined end.

These units are pre-arranged for multiple pumps, they have the drive shaft code 59.

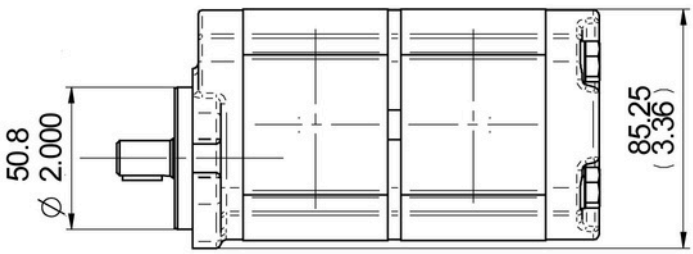

E0.109.0219.02.00IM02

PERFORMANCE CURVES

Performance curvescarriedout withoil viscosity at 21cStandoiltemperature at 50°C.
The performance of these diagrams areapproximate. Incase youneed approvedvalues,please contact our technical department.

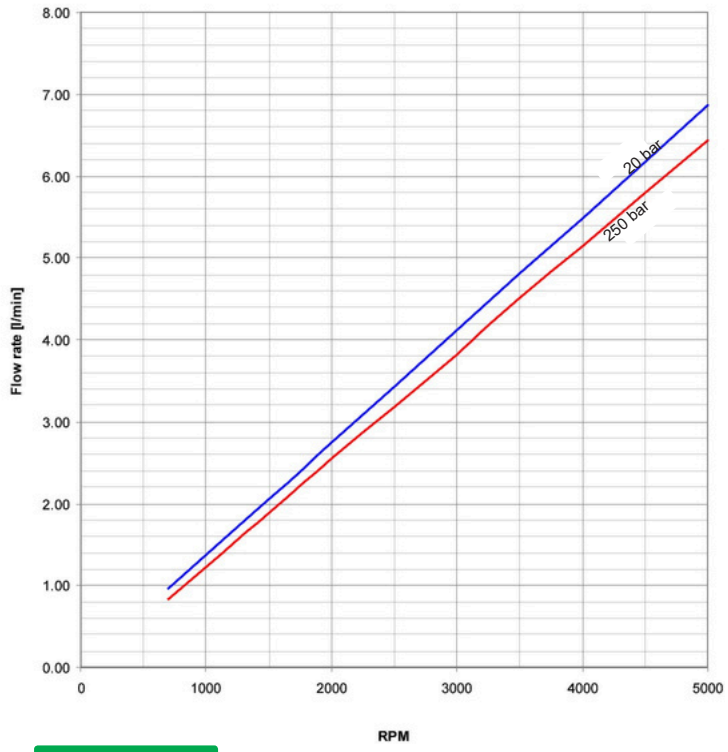

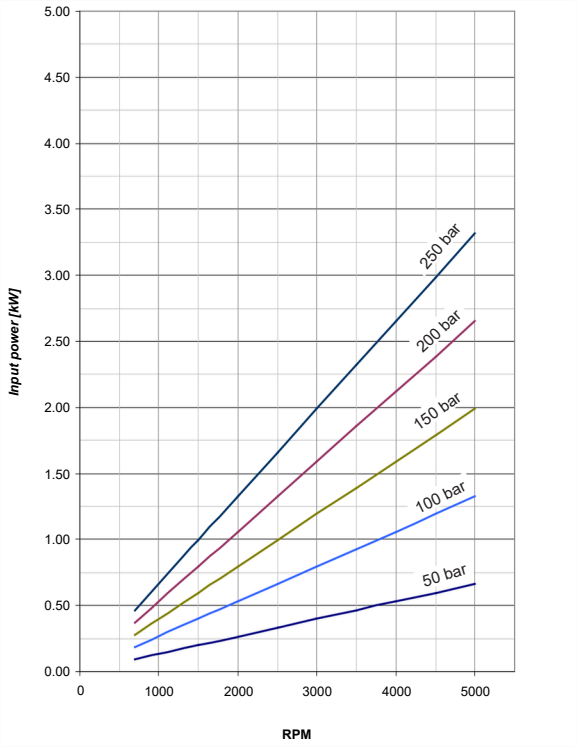

1.5PE - 1.4

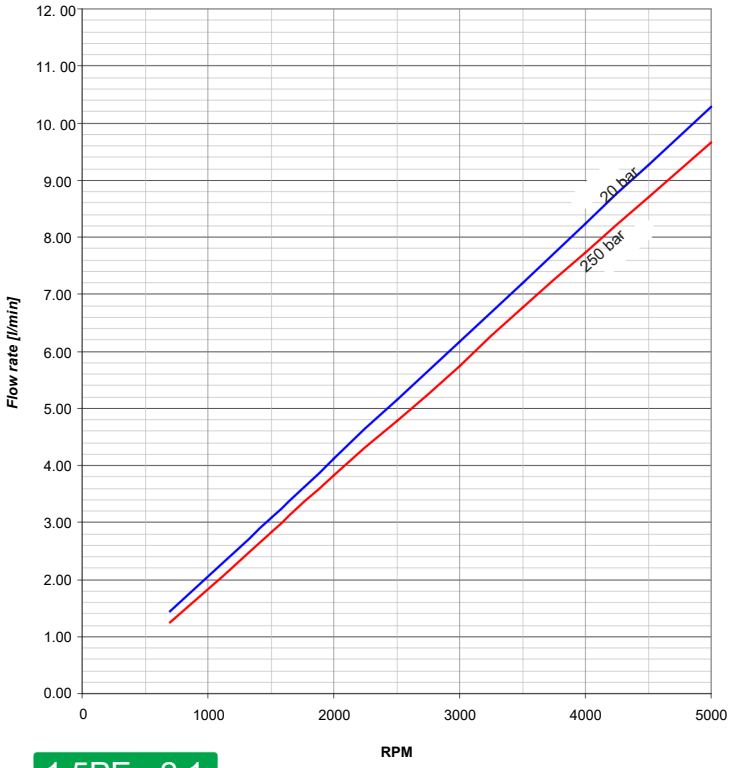

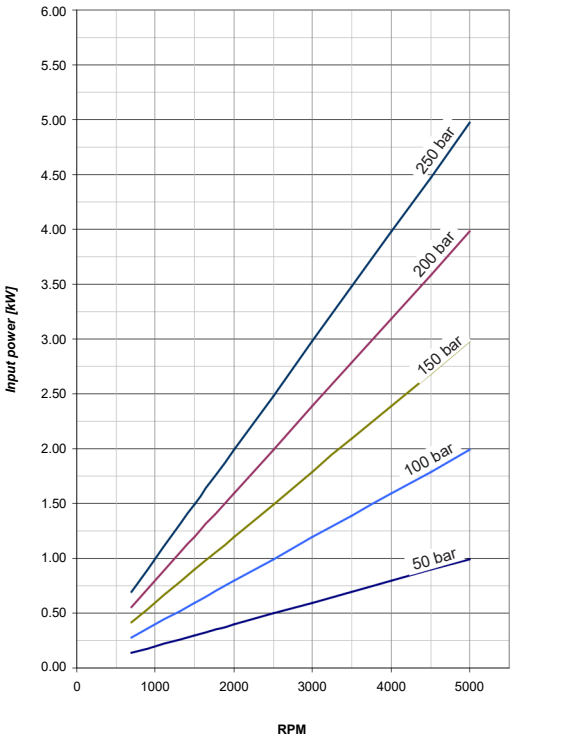

1.5PE - 2.1

E0.109.0219.02.00IM03

PERFORMANCE CURVES

Performance curvescarriedout withoil viscosity at 21cStandoiltemperature at 50°C.
The performance of these diagrams areapproximate. Incase youneed approvedvalues,please contact our technical department.

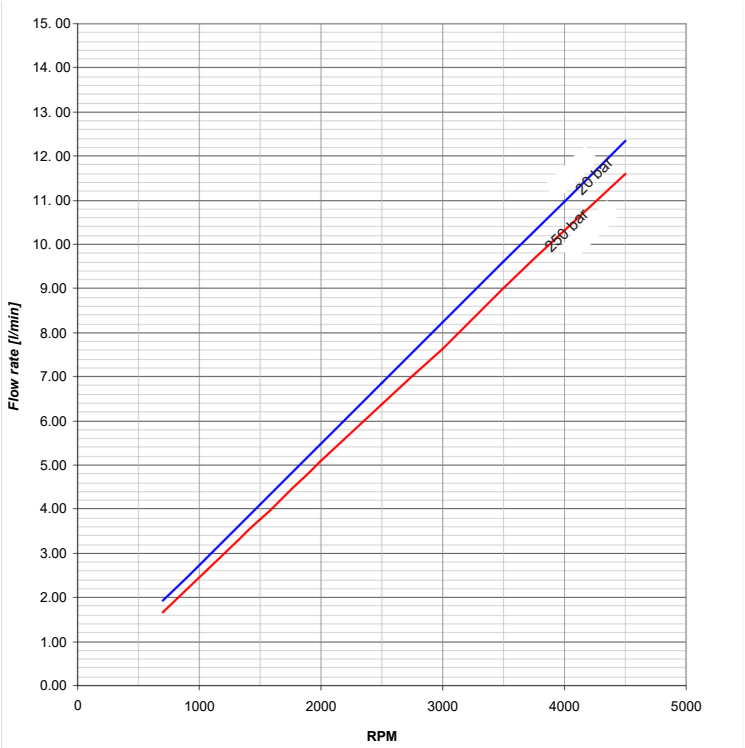

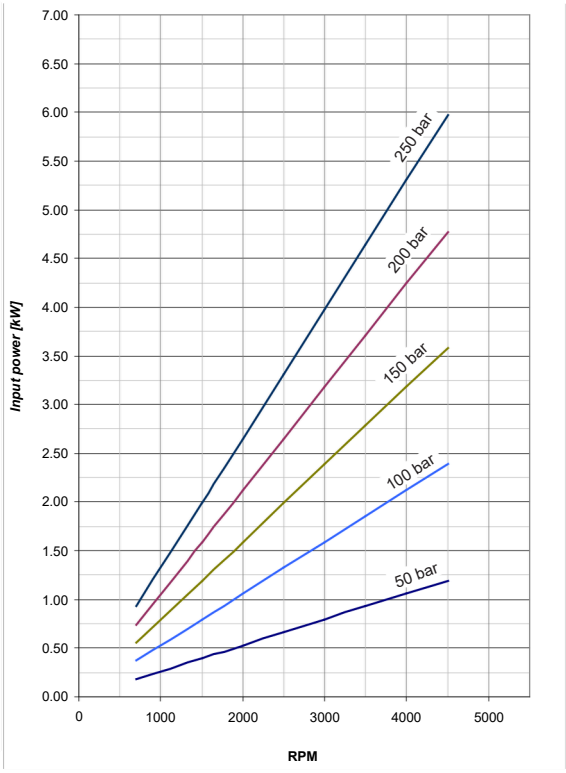

1.5PE - 2.8

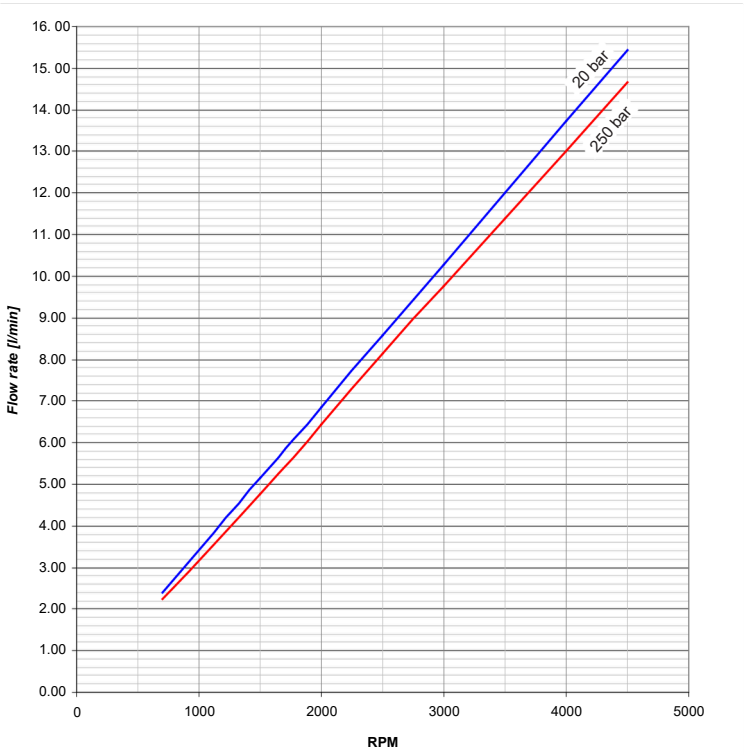

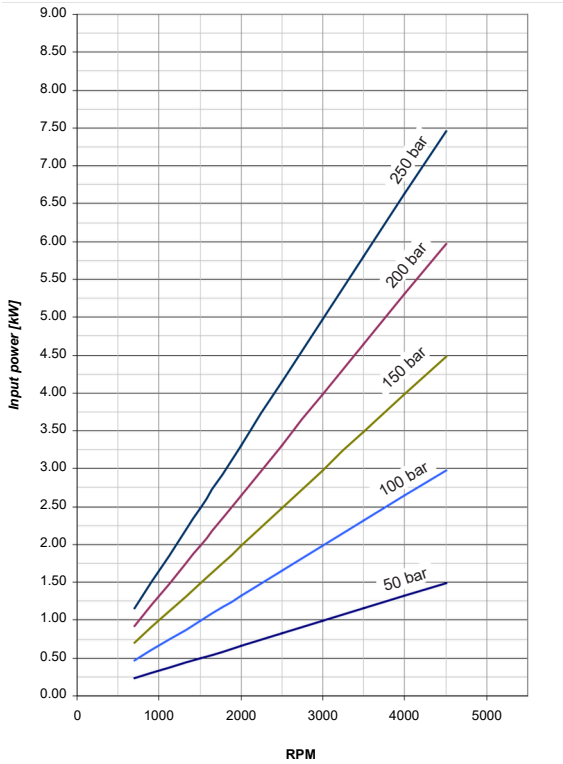

1.5PE - 3.5

PERFORMANCE CURVES

Performance curvescarriedout withoil viscosity at 21cStandoiltemperature at 50°C.
The performance of these diagrams areapproximate. Incase youneed approvedvalues,please contact our technical department.

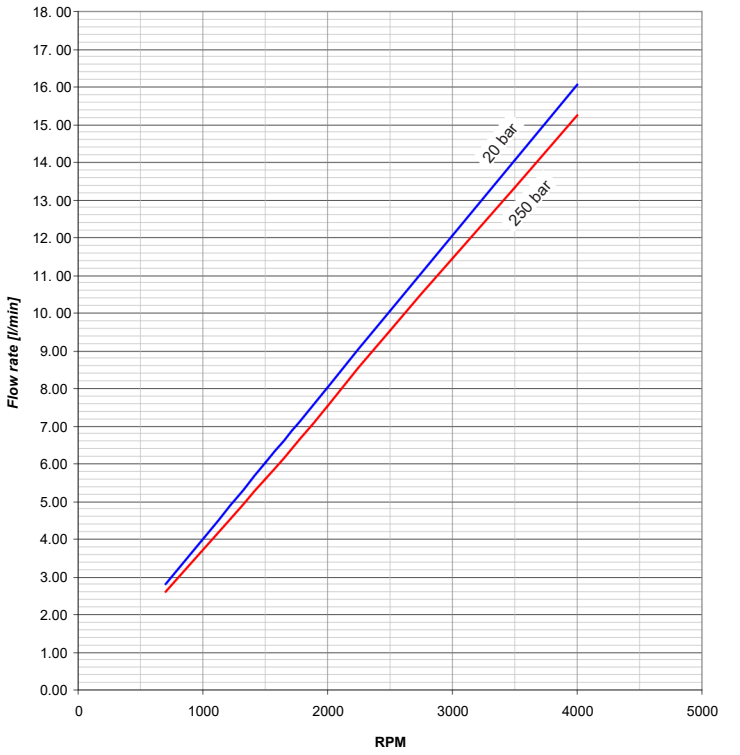

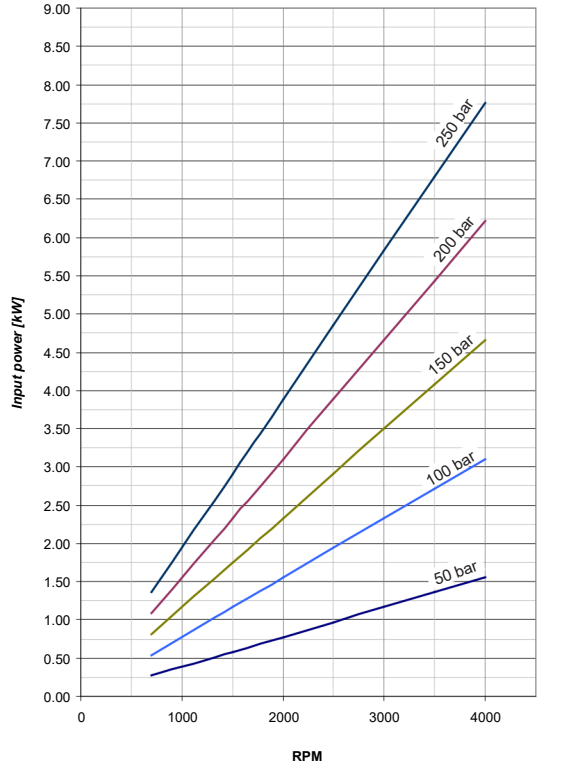

1.5PE - 4.1

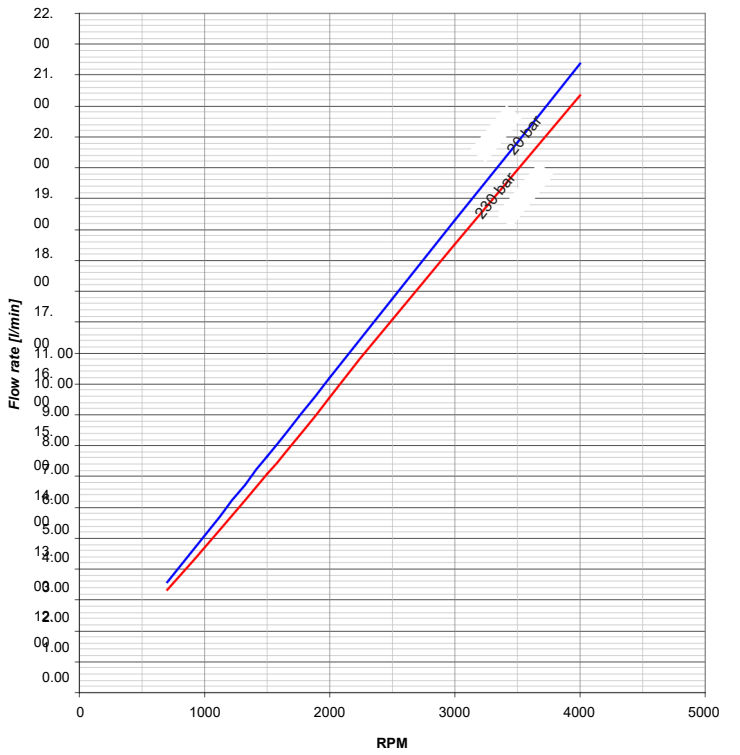

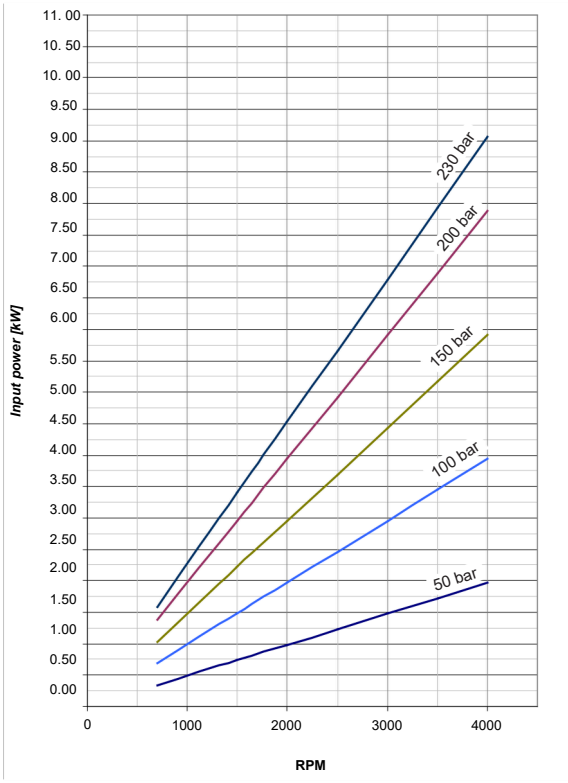

1.5PE - 5.2

E0.109.0219.02.00IM03

PERFORMANCE CURVES

Performance curvescarriedout withoil viscosity at 21cStandoiltemperature at 50°C.
The performance of these diagrams areapproximate. Incase youneed approvedvalues,please contact our technical department.

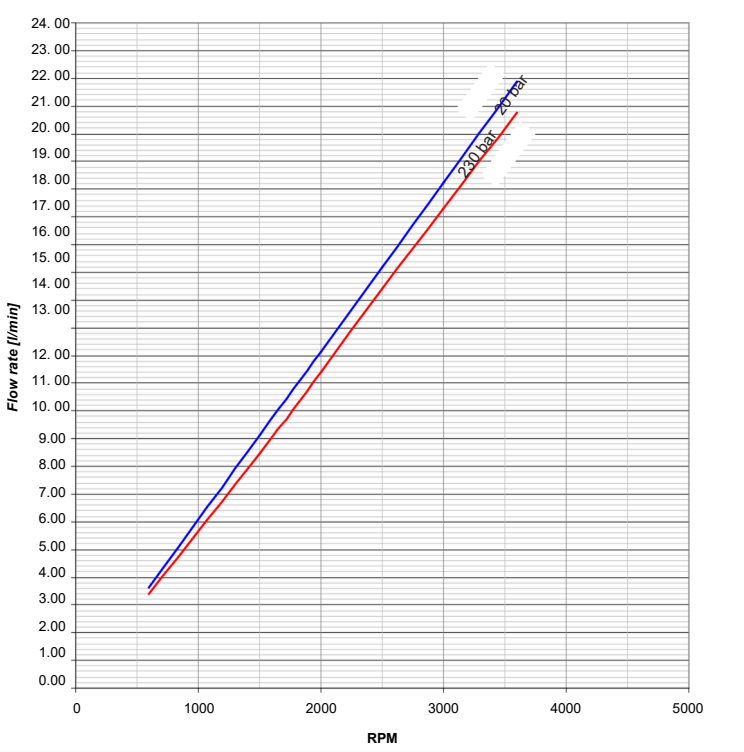

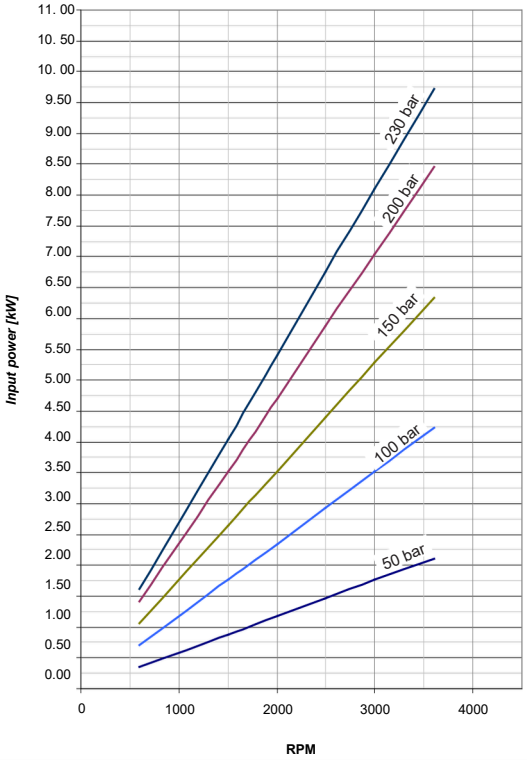

1.5PE - 6.2

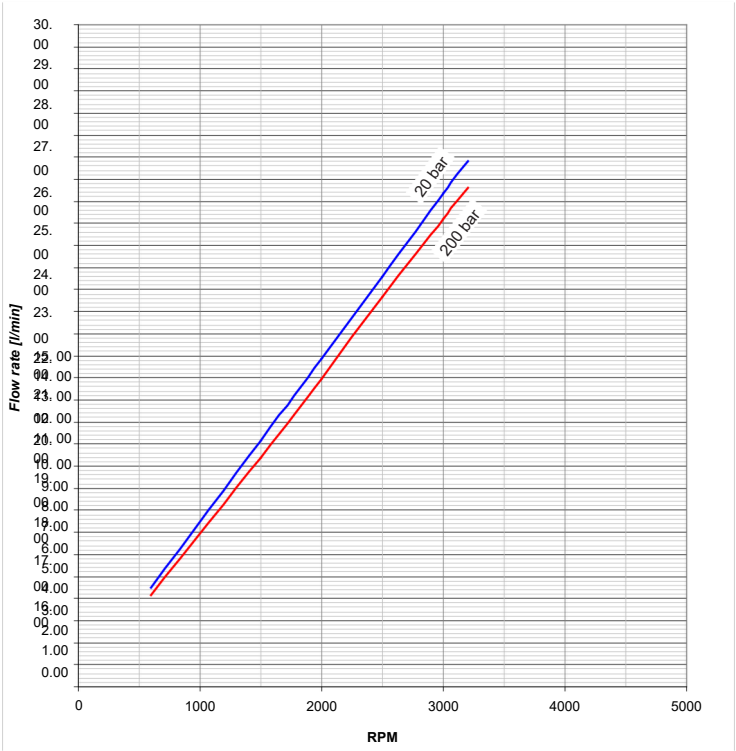

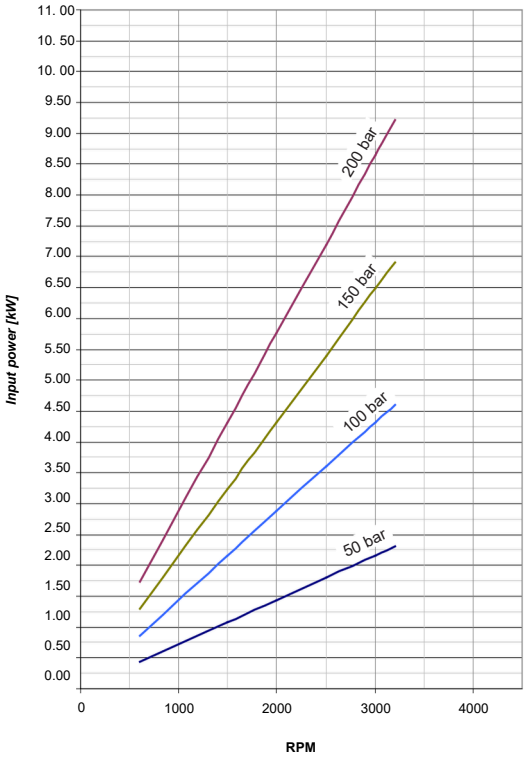

1.5PE - 7.6

PERFORMANCE CURVES

Performance curvescarriedout withoil viscosity at 21cStandoiltemperature at 50°C.
The performance of these diagrams areapproximate. Incase youneed approvedvalues,please contact our technical department.

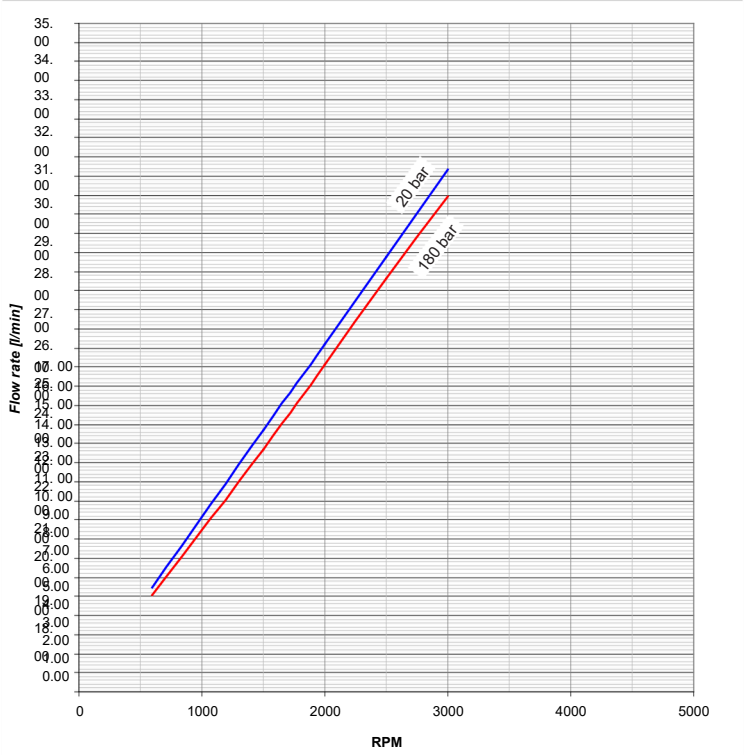

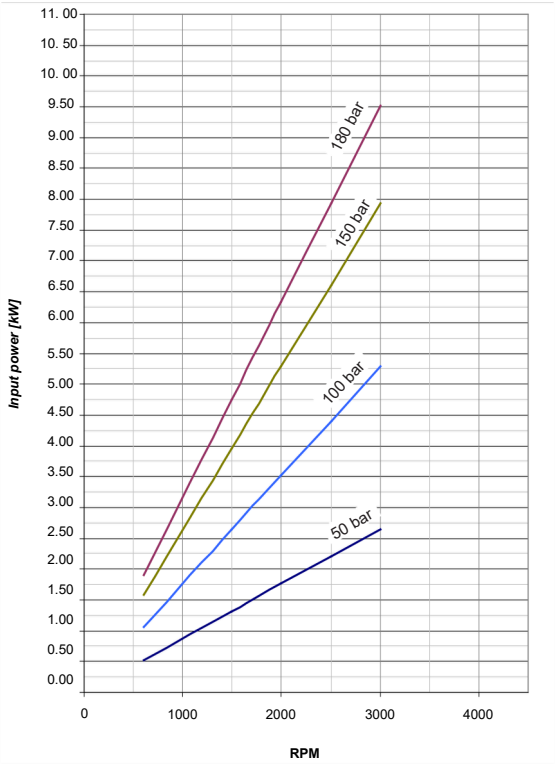

1.5PE - 9.3

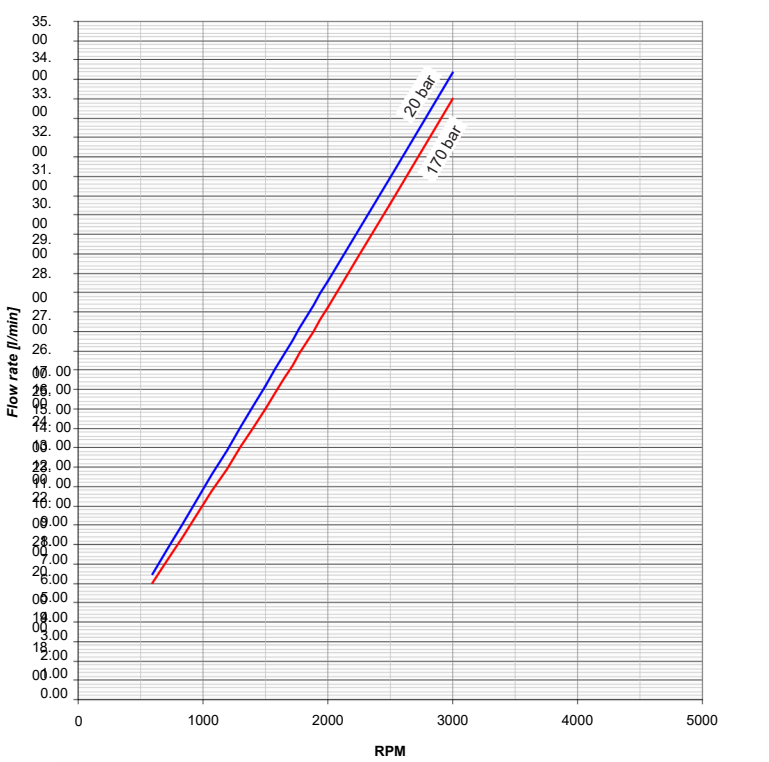

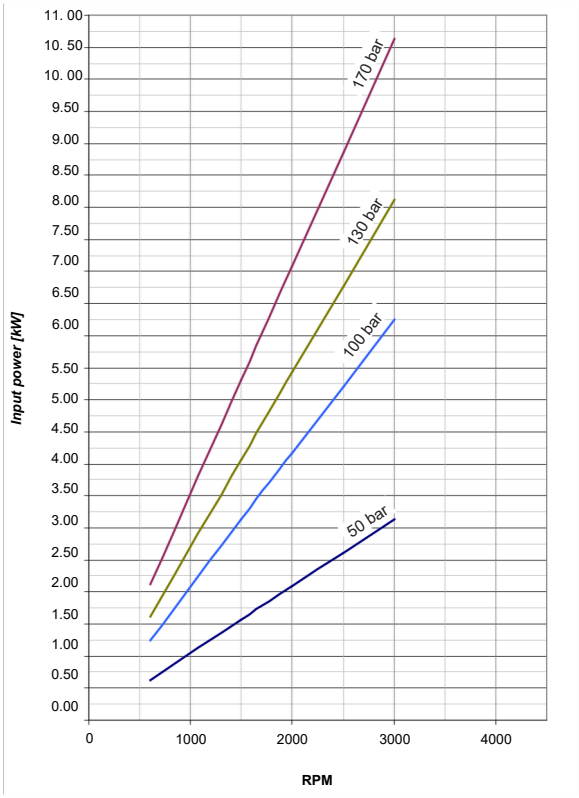

1.5PE - 11

E0.109.0219.02.00IM03

1.5PE-How to order

SINGLE PUMPS

1.5PE	A	B	-	C	D	-	E	-	F	-	G

DISPLACEMENTS		CODES A
1.4 cm³/rev.	*0.09 cu.in/rev.*	1.4
2.1 cm3/rev.	*0.13 cu.in/rev.*	2.1
2.8 cm3/rev.	*0.17 cu.in/rev.*	2.8
3.5 cm3/rev.	*0.21 cu.in/rev.*	3.5
4.1 cm3/rev.	*0.25 cu.in/rev.*	4.1
5.2 cm3/rev.	*0.32 cu.in/rev.*	5.2
6.2 cm3/rev.	*0.38 cu.in/rev.*	6.2
7.6 cm3/rev.	*0.46 cu.in/rev.*	7.6
9.3 cm3/rev.	*0.57 cu.in/rev.*	9.3
11 cm3/rev.	*0.67 cu.in/rev.*	11

ROTATION (page 132)	CODES B
Clockwise	D
Anti-clockwise	S
Reversible	R

PORTS (page 141)	CODES C
Flanged ports european standard	P
Flanged ports german standard	B
Threaded ports GAS (BSPP)	G
Threaded ports SAE (ODT)	R

DRIVE SHAFTS (page 142)	CODES D
European Tapered 1:8	18
European Tapered 1:8	19
SAE A splined 9T	51
DIN 5480 internal splined **(only for rear pumps- see page 21)**	59
SAE AA parallel Ø12,7	80
SAE parallel Ø12,7	83

G VALVES IN THE COVER (page 20)	CODE
Fixed main relief valve	VS

F SEALS	CODE
Nitrile-butadiene rubber (nbr)	
Viton	V

E MOUNTING FLANGES (page 19)	CODES
European standard	P0
European standard	P01
SAE AA (2 bolts)	S0
SAE AA (4 bolts)	S1

Order example: 1.5PE 6.2D, ports European standard (P), drive shaft(51),mounting flange (P0)
1.5PE6.2D-P51P0

E0.109.0219.02.00IM02

MULTIPLE PUMPS

1.5PE	A	/	A	-	B	-	C	-	D	-	E	-	F	-	G	-	H

DISPLACEMENTS		CODES A
1.4 cm³/rev.	*0.09 cu.in/rev.*	1.4
2.1 cm3/rev.	*0.13 cu.in/rev.*	2.1
2.8 cm3/rev.	*0.17 cu.in/rev.*	2.8
3.5 cm3/rev.	*0.21 cu.in/rev.*	3.5
4.1 cm3/rev.	*0.25 cu.in/rev.*	4.1
5.2 cm3/rev.	*0.32 cu.in/rev.*	5.2
6.2 cm3/rev.	*0.38 cu.in/rev.*	6.2
7.6 cm3/rev.	*0.46 cu.in/rev.*	7.6
9.3 cm3/rev.	*0.57 cu.in/rev.*	9.3
11 cm3/rev.	*0.67 cu.in/rev.*	11

ROTATION (page 132)	CODES B
Clockwise	D
Anti-clockwise	S

PORTS (page 141)	CODES C
Flanged ports european standard	P
Flanged ports german standard	B
Threaded ports GAS (BSPP)	G
Threaded ports SAE (ODT)	R

DRIVE SHAFTS (page 142)	CODES D
European Tapered 1:8	18
European Tapered 1:8	19
SAE A splined 9T	51
SAE AA parallel Ø12,7	80
SAE parallel Ø12,7	83

Order example: 1.5PE 6.2 - 4.1D, ports GAS (G), drive shaft (19),mountingflange(P01).
1.5PE6.2/4.1D-G19P01

H VALVES IN THE COVER (page 20)	CODE
Fixed main relief valve	VS

G SUCTION TYPES	CODE
Common suction	UA*

F SEALS	CODE
Nitrile-butadiene rubber (nbr)	
Viton	V

E MOUNTING FLANGES (page 19)	CODES
European standard	P0
European standard	P01
SAE AA (2 bolts)	S0
SAE (4 bolts)	S1

*UA: this type of multiple pump is a Salami standard multiple pump which has only one inlet port opened, all the other inlet port are closed.
In case of common suction, the code 1 - 2 or 3, correspond to the body where inlet is located.

E0.109.0219.02.00IM03

www.salami.it

Youcan findour mostup to date“STANDARD SALES CONDITIONS” on our website.
Potete trovarele nostre più aggiornate“CONDIZIONI DI VENDITA STANDARD” sul nostro sito.

Ph. +39 059 387 411 - sales@salami.it

Watch our tutorials on our official youtube channels:
Salami Fluid Power
Salami Fluid Power World
Salami Fluid Power France
Salami Fluid Power España
Salami Fluid Power Deutsch

SALAMI S.P.A.
Via EmiliaOvest 1006
41123 Modena (Italy)
Ph. +39 059 387 411
F. +39 059 387 639
sales@salami.it

SALAMI FRANCE
22,rue Louis Saillant
69120 Valux en Velin
Lyon
Ph. +33-04-78809941
F. +33-04-78803669
e.pasian@salami.fr

SALAMI ESPAÑA
Poligono Industrial Armenteres C/Primer de Maig, 18, Nave 4 08980 San Feliu de Llobregat Barcelona Ph. +34-93-6665451 F. +34-93-6667826 info@salamispain.com

SALAMI HYDRAULICS N.A INC
4630 Crossroads Park Drive
Liverpool
NY 13088 - USA
Ph. +1-315-295-2363
F. +1-315-295-2364
info@salamihydraulics.com

2PE

Aluminiumgear pumps

Technical Catalogue

E0.120.0219.02.00IM04

salami®

GEAR PUMPS

SALAMI gear pumps are available with displacements from 1.4 cm3/rev to 99 cm3/rev *(from 0.09 cu.in/rev to 6.03 cu.in/rev).*
Multiple pumps can always be relized combining stages taken from different or same series.
Several options of shafts, flanges and ports as for European, German and American standards are available for all the pumps.
SALAMI gear pumps offer:
•High volumetric efficiency thanks to an innovative design and an accurate control of machining tolerances.
•Axial compensation achieved by the use of floating bushes that allow high volumetric efficiency throughout the working pressure range.
•DU bearings to ensure high pressure capability.
•12 teeth integral gear and shaft.
•Aluminium body.
•Cast iron flange and cover.
•Double shaft seals.
•Nitrile seals as standard and Viton seals in high temperature applications.
•All pumps are hydraulically tested after assembly to ensure the highest standard performance.
•Gear pumps are ideal for mobile equipment including: snow plows, light duty equipment, farm vehicles, town trucks, cherry pickers, lift gates, utility vehicles, aerial devices, hoists, spreaders, fan drive.
•Also available Bidirectional rotation.

WORKING CONDITIONS

- Pump inlet pressure (absolute pressure)	0.8 to 1.5 bar *(11.6 to 21.7 psi)* 12 mm2 / sec
- Minimum operating fluid viscosity	800 mm2 / sec
- Max starting viscosity	17 - 65 mm2 / sec
- Suggested fluid viscosity range	-20 to 80 °C
- Fluid operating temperature range	-15 to 110°C
- Fluid operating temperature range with FPM seals (Viton)	-30 to 110°C
- Fluid operating temperature range with HNBR seals*	Mineral oil according to DIN 51524.
- Hydraulic fluid *Available on request	Other hydraulic fluids on request.

DEFINITION OF PRESSURES

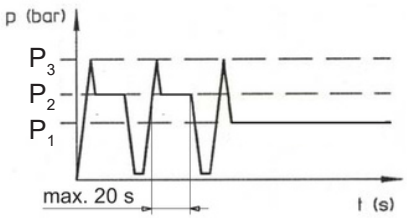

P3 ≡ Peak pressure
P2 ≡ Intermittent operating pressure (1/3 of working time)
P1 ≡ Continuous operating pressure

P

P

E0.100.0821.02.00IM03

DRIVE SHAFTS

Radial and axial loads on the shafts must be avoided since they reduce the life of the unit.
In order to avoid misalignment during the assembly with the primary engine, a connection with “Oldham” coupling (or coupling having convex toothed hub) is recommended.

ROTATION

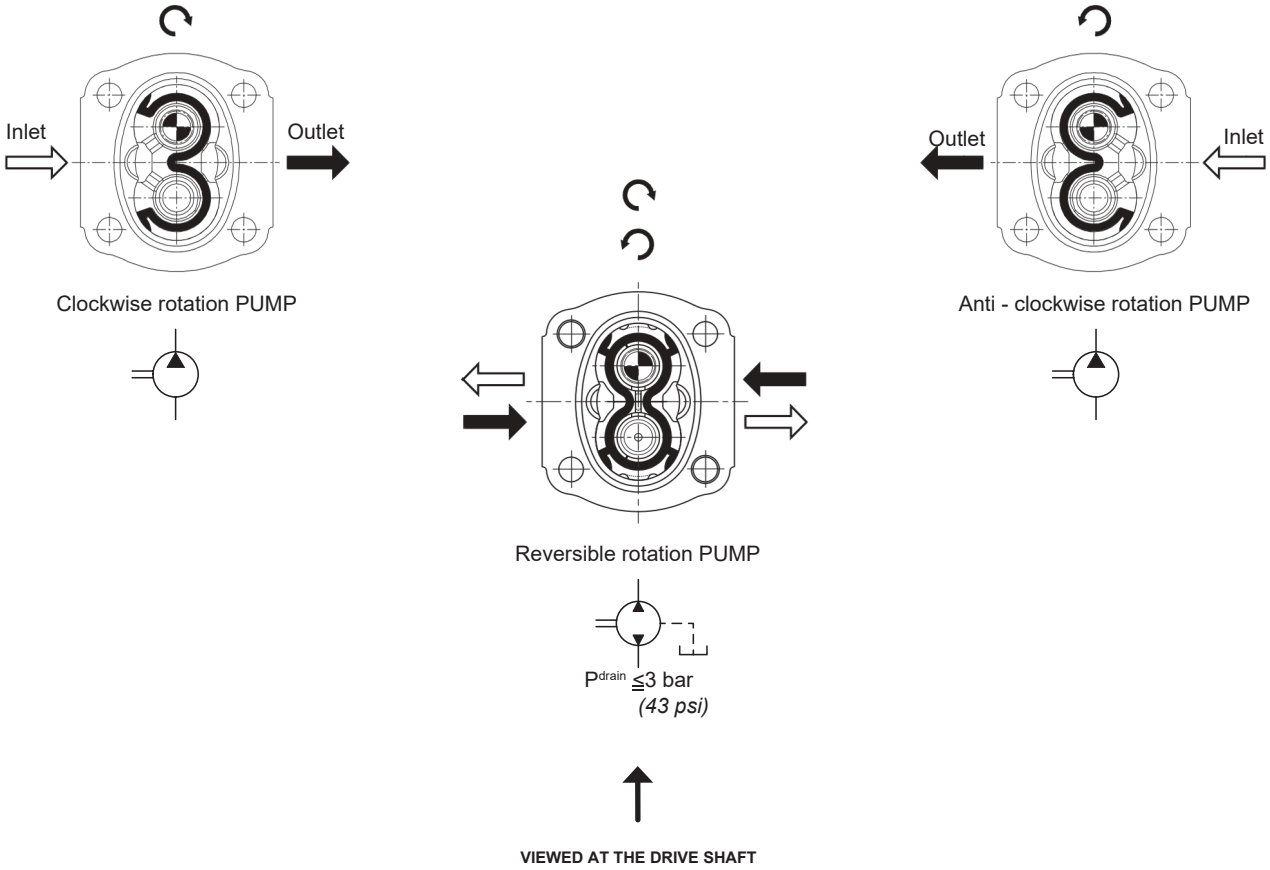

HYDRAULIC PIPE LINE

To ensure favorable suction conditions it is important to keep pressure drop in suction pipe line to a minimum value (see TECHNICAL DATA).
To calculate hydraulic pipe line size, the designer can use; as an approximate guide, the following fluid speed figures:

From 1 to 2 m/sec on suction pipe line
From 6 to 10 m/sec on pressure pipe line

From *3.28* to *6.36 ft/sec* on suction pipe line
From *19.7* to *32.8 ft/sec*on pressure pipe line

The lowest fluid speed values in pipe lines is recommended when the operating temperature range is high and/or for continuos duty.
The highest value is recommended when the temperature difference is low and/or for intermittent duty.
When tandem pumps are supplied by 2 different reservoirs with 2 different fluids it is necessary to specify “AS” version.

E0.100.0821.02.00IM03

FILTRATION INDEX RECOMMENDED

Working pressure	>200 bar/2900 psi	<200 bar/2900 psi
Contamination class NAS 1638	9	10
Contamination class ISO 4406	19/18/15	20/19/16
Achieved with filter βx=75	15 µm	25 µm

COMMON FORMULAS FOR PUMPS

C = Input torque $= \dfrac{q \cdot \Delta p}{62.8 \cdot \eta_m}$ (Nm)

P = Input power $= \dfrac{q \cdot n \cdot \Delta p \; 10^{-3}}{600 \; \eta_m}$ (kW)

Q = Outlet flow $= \dfrac{q \cdot n \cdot \eta_v}{1000}$ (l/min)

LEGENDA

Δp = Working pressure (bar)

q = Displacement (cm^3/rev)

n = Speed (min^{-1})

η_m = Mechanical eff. (0.92)

η_v = Volumetric eff. (0.95)

IDENTIFICATION LABEL

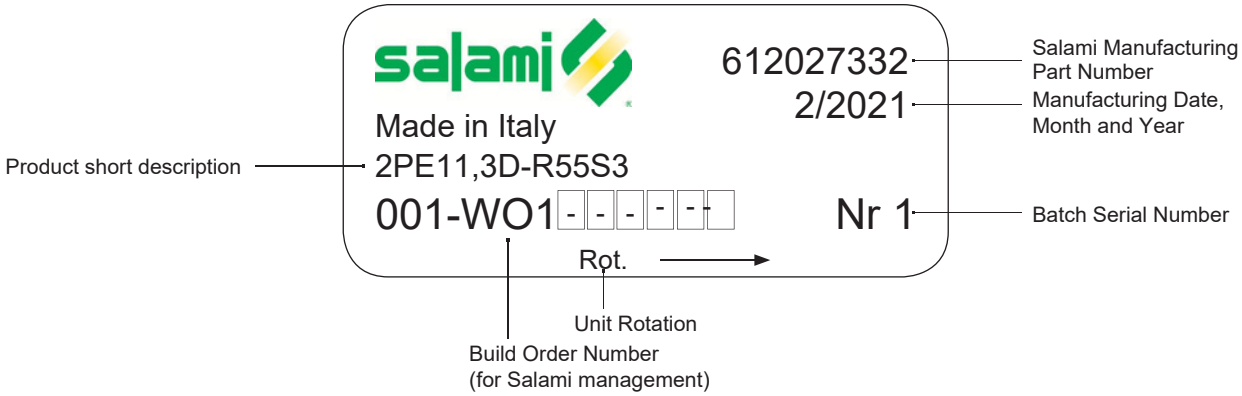

TECHNICAL DATA

	Displacement		Continuous pressure P1		Intermittent pressure P2		Peak pressure P3		Max. speed	Min. speed
GROUP 1.5 - E SERIES	cm3/rev	*cu.in/rev*	bar	*psi*	bar	*psi*	bar	*psi*	rpm	
1.5PE - 1.4	1.4	*0.09*	250	*3625*	270	*3915*	290	*4205*	5000	700
1.5PE - 2.1	2.1	*0.13*	250	*3625*	270	*3915*	290	*4205*	5000	700
1.5PE - 2.8	2.8	*0.17*	250	*3625*	270	*3915*	290	*4205*	4500	700
1.5PE - 3.5	3.5	*0.21*	250	*3625*	270	*3915*	290	*4205*	4500	700
1.5PE - 4.1	4.1	*0.25*	250	*3625*	270	*3915*	290	*4205*	4000	700
1.5PE - 5.2	5.2	*0.32*	230	*3335*	250	*3625*	270	*3915*	4000	700
1.5PE - 6.2	6.2	*0.38*	230	*3335*	250	*3625*	270	*3915*	3600	600
1.5PE - 7.6	7.6	*0.46*	200	*2900*	220	*3190*	250	*3625*	3300	600
1.5PE - 9.3	9.3	*0.57*	180	*2610*	200	*2900*	240	*3480*	3000	600
1.5PE - 11	11	*0.67*	170	*2465*	190	*2755*	220	*3190*	3000	600

GROUP 2 - E SERIES	cm3/rev	*cu.in/rev*	bar	*psi*	bar	*psi*	bar	*psi*	rpm	
2PE - 3.2*	3.2	*0.19*	250	*3625*	280	*4060*	300	*4350*	4000	600
2PE - 3.9*	3.9	*0.24*	250	*3625*	280	*4060*	300	*4350*	4000	600
2PE - 4.5	4.6	*0.27*	250	*3625*	280	*4060*	300	*4350*	4000	600
2PE - 6.5	6.5	*0.4*	250	*3625*	280	*4060*	300	*4350*	4000	600
2PE - 8.3	8.2	*0.5*	250	*3625*	280	*4060*	300	*4350*	3500	500
2PE - 10.5	10.6	*0.65*	250	*3625*	280	*4060*	300	*4350*	3500	500
2PE - 11.3	11.5	*0.68*	250	*3625*	280	*4060*	300	*4350*	3500	500
2PE - 12.5	12.7	*0.77*	250	*3625*	280	*4060*	300	*4350*	3500	500
2PE - 13.8	13.8	*0.84*	250	*3625*	280	*4060*	300	*4350*	3500	500
2PE - 16	16.6	*1.01*	250	*3625*	280	*4060*	300	*4350*	3000	400
2PE - 19	19.4	*1.15*	220	*3190*	240	*3480*	260	*3750*	3000	400
2PE - 22.5	22.9	*1.37*	200	*2900*	220	*3190*	240	*3480*	2750	400
2PE - 26	26.6	*1.62*	180	*2610*	200	*2900*	220	*3190*	2500	400

*Available only as rear pump

GROUP 2.5 - B SERIES	cm3/rev	*cu.in/rev*	bar	*psi*	bar	*psi*	bar	*psi*	rpm	
2.5PB - 5.5*	5.97	*0.36*	250	*3625*	280	*4060*	300	*4350*	3000	600
2.5PB - 8.3*	8.29	*0.50*	250	*3625*	280	*4060*	300	*4350*	3000	600
2.5PB - 11.5*	11.76	*0.72*	250	*3625*	280	*4060*	300	*4350*	3000	600
2.5PB - 13.8*	14.07	*0.86*	250	*3625*	280	*4060*	300	*4350*	3000	600
2.5PB - 16	16	*0.97*	250	*3625*	280	*4060*	300	*4350*	3000	600
2.5PB - 19	19.3	*1.17*	250	*3625*	280	*4060*	300	*4350*	3000	600
2.5PB - 22	22.2	*1.35*	250	*3625*	280	*4060*	300	*4350*	3000	500
2.5PB - 25	25.2	*1.53*	250	*3625*	280	*4060*	300	*4350*	3000	500
2.5PB - 28	27.6	*1.68*	250	*3625*	280	*4060*	300	*4350*	3000	500
2.5PB - 32	32.4	*1.97*	230	*3335*	250	*3625*	260	*3750*	3000	500
2.5PB - 38	38.1	*2.32*	200	*2900*	220	*3190*	240	*3480*	2750	400
2.5PB - 44	44.2	*2.69*	170	*2465*	190	*2755*	210	*3040*	2500	400

*Available only as rear pump. Displacements **11.5-13.8** are available as single pump only with drive shaft “55”.

E0.100.0821.02.00IM03

TECHNICAL DATA

	Displacement		Continuous pressure P1		Intermittent pressure P2		Peak pressure P3		Max. speed	Min. speed
GROUP 3 - E SERIES	cm3/rev	*cu.in/rev*	bar	*psi*	bar	*psi*	bar	*psi*	rpm	
3PE - 21	20.6	*1.26*	250	*3625*	280	*4060*	300	*4350*	3000	600
3PE - 27	27	*1.65*	250	*3625*	280	*4060*	300	*4350*	3000	600
3PE - 33	33.5	*2.04*	250	*3625*	280	*4060*	300	*4350*	3000	600
3PE - 38	38.7	*2.36*	250	*3625*	280	*4060*	300	*4350*	2750	500
3PE - 46	46.9	*2.86*	250	*3625*	270	*3915*	280	*4060*	2750	500
3PE - 55	54.1	*3.3*	220	*3190*	240	*3480*	250	*3625*	2500	400
3PE - 65	63.1	*3.85*	200	*2900*	220	*3190*	240	*3480*	2500	400
3PE - 75	73.4	*4.48*	180	*2610*	200	*2900*	220	*3190*	2500	400

GROUP 3.5 - C SERIES	cm3/rev	*cu.in/rev*	bar	*psi*	bar	*psi*	bar	*psi*	rpm	
3.5PC - 55	54.8	*3.34*	250	*3625*	280	*4060*	300	*4350*	2750	400
3.5PC - 64	63.2	*3.85*	250	*3625*	280	*4060*	300	*4350*	2750	350
3.5PC - 75	74.7	*4.55*	230	*3335*	250	*3625*	280	*4060*	2500	300
3.5PC - 87	88	*5.36*	210	*3040*	230	*3330*	260	*3750*	2250	300
3.5PC - 98*	99	*6.03*	200	*2900*	220	*3190*	250	*3625*	2000	300

*Displacement 98 are special release, please contact sales department.

Max Speed must be lowered by 10% for system working continuosly at p1 pressure.
Max pressure must be lowered by10% for bi-directional pump.

ROTATION CHANGING INSTRUCTIONS FOR UNITS

Keep the working surface cleaned as well as the exterior of the pump before starting and avoid inner contamination of the pump. The pump shown below is a clockwise rotating pump.
To achieve anti - clockwise rotation, please read the following instructions carefully.

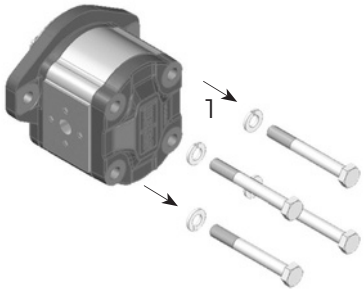

1 - Loosen and fully unscrew the bolts. **2** - Lay the pump on the working area in order to have the mounting flange turned upside. **3** - Coat the shaft end with grease to avoid damaging the shaft seal. **4** - Remove the flange and lay it on the working area; verify that the seal is correctly located in the body seat.

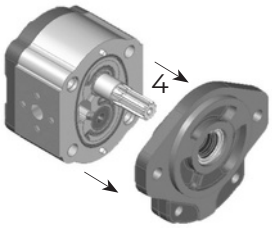

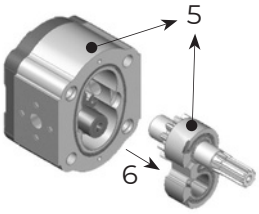

5 - Mark the position of the bushing and eventually of the thrust plate, as well, with reference to the body.
6 - Remove the bushing, thrust plate and the driving gear taking care to avoid driven gear axial shifts.

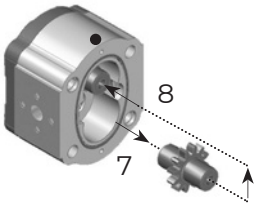

7 - Draw out the driven gear from its housing, taking care to avoid rear cover axial shifts.
8 - Re-locate the driven gear in the position previously occupied by the driving gear.

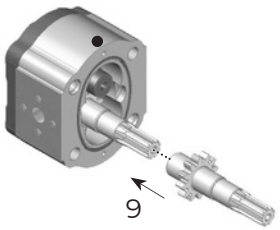

9 - Re-locate the driving gear in the position previously occupied by the driven gear.

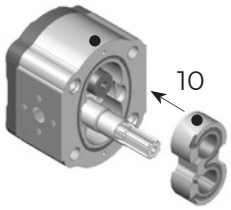

10 - Replace the bushing and thrust plate taking care that:
- marks are located as on the picture
- surface containing the seal is visible
- seal and its protection are correctly located.

11 - Clean the body and mounting flange facing surfaces.
12 - Verify that the two plugs are located in the body.
13 - Refit the mounting flange, turned 180° from its original position.
14 - Replace the bolts and tighten clockwise evenly to an appropriate torque.
15 - Check that the shaft rotates freely.
16 - Mark on the flange the new direction of rotation.

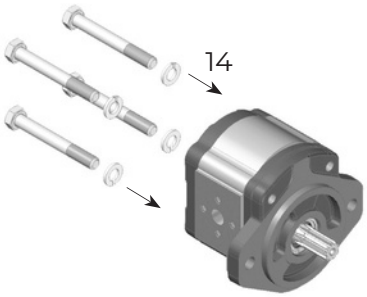

E0.100.0821.02.00IM03

INDEX

Final revised edition - February 2019

SHAFTS AND FLANGES COMBINATION

2PE	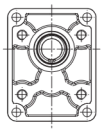	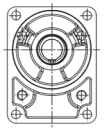			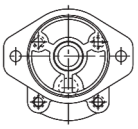		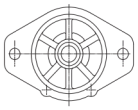
	CODE **P1** European Standard	CODE **B1** German Standard	CODE **B2-B3** German Standard	CODE **B4-B5** German Standard	CODE **S2** SAE A 2 Bolts	CODE **C1** 4 Bolts Iveco	CODE **S3** SAE B 2 Bolts
 CODE **25** Tapered 1:5		25B1		25B4 25B5			
 CODE **28** Tapered 1:8	28P1						
 CODE **03** Tang drive for electric motors			03B2 03B3				
 CODE **04** Tang drive				04B4 04B5			
 CODE **62** DIN 5482 splined 9 T	62P1	62B1		62B4 62B5		62C1	
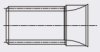 CODE **52** SAE A splined 9T					52S2		
 CODE **54** SAE A splined 11T					54S2		
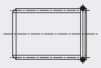 CODE **55** SAE B splined 13T							55S3
 CODE **85** SAE A parallel shaft Ø19.05					85S2		
 CODE **82** SAE A parallel shaft Ø15.87	82P1				82S2		

Note: other versions available, see shafts and flanges information.

Displacements up to 1.58 cu.in./rev
Pressure up to 4350 psi

GEAR PUMPS

Displacements up to 25.8 cm3/rev
Pressure up to 300 bar

ASSEMBLING DIMENSIONS

Type			3.2*	3.9*	4.5	6.5	8.3	10.5	11.3	12.5	13.8	16	19	22.5	26
Displacement		cm3/rev	3.2	3.9	4.6	6.5	8.2	10.6	11.5	12.7	13.8	16.6	19.4	22.9	25.8
		cu.in./rev	*0.19*	*0.24*	*0.27*	*0.40*	*0.50*	*0.65*	*0.68*	*0.77*	*0.84*	*1.01*	*1.15*	*1.37*	*1.58*
Dimension A		mm	47.1			49.95	52.8	56.3	59.7		63.5	67.5	75.6	81	86.8
		in	*1.83*			*1.97*	*2.07*	*2.22*	*2.35*		*2.5*	*2.65*	*2.97*	*3.19*	*3.42*
Dimension C		mm	23.55			25	26.4	28.15	29.75		31.75	33.75	37.80	40.5	43.4
		in	*0.93*			0.98	*1.04*	*1.11*	*1.17*		*1.25*	*1.33*	*1.49*	*1.59*	*1.71*
Continuous pressure	P1	bar	250	250	250	250	250	250	250	250	250	250	220	200	180
		psi	*3625*	*3625*	*3625*	*3625*	*3625*	*3625*	*3625*	*3625*	*3625*	*3625*	*3190*	*2900*	*2610*
Intermittent pressure	P2	bar	280	280	280	280	280	280	280	280	280	280	240	220	200
		psi	*4060*	*4060*	*4060*	*4060*	*4060*	*4060*	*4060*	*4060*	*4060*	*4060*	*3480*	*3190*	*2900*
Peak pressure	P3	bar	300	300	300	300	300	300	300	300	300	300	260	240	220
		psi	*4350*	*4350*	*4350*	*4350*	*4350*	*4350*	*4350*	*4350*	*4350*	*4350*	*3750*	*3480*	*3190*
Max speed		rpm	600	600	600	600	500	500	500	500	500	400	400	400	400
		rpm	*4000*	*4000*	*4000*	*4000*	*3500*	*3500*	*3500*	*3500*	*3500*	*3000*	*3000*	*2750*	*2500*
Min speed		kg	3.00	3.05	3.10	3.50	3.60	3.70	3.75	3.78	3.86	4.00	4.18	4.29	4.34
		lbs	*6.61*	*6.72*	*6.83*	*7.72*	*7.94*	*8.16*	*8.27*	*8.33*	*8.51*	*8.82*	*9.22*	*9.46*	*10.1*
Weight															

*Available only as rear pump

For flanges code:
P1-B1-S2-S6, this dimension is 19 mm *(0.75 in.)*
B2-B3-B4-B5, this dimension is 16.5 mm *(0.65 in.)*

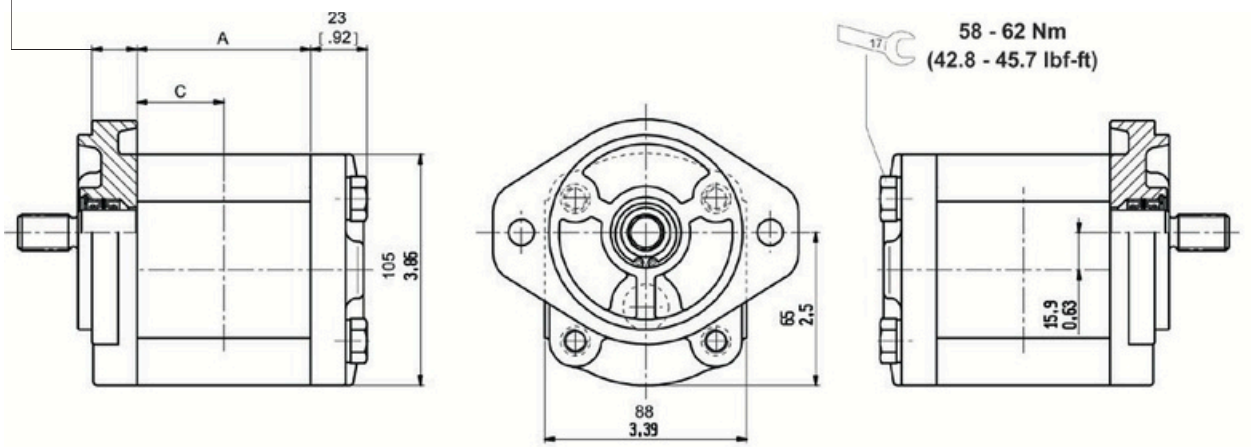

E0.120.0219.02.00IM04

FLANGED AND THREADED PORTS

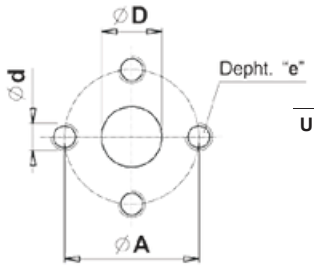

code P

Flanged ports
european standard

UNI-DIRECTIONAL PUMPS

TYPE	INLET				OUTLET			
	Ø D	Ø A	d	e	Ø D	Ø A	d	e
From 3.2 to 8.3	13 *(0.51")*	30 *(1.19")*	M6	13 *(0.51")*	13 *(0.51")*	30 *(1.18")*	M6	13 *(0.51")*
From 11.3 to 22.5	20 *(0.79")*	40 *(1.57")*	M8					
26	22 *(0.87")*							

BI-DIRECTIONAL PUMPS Special version available on request.

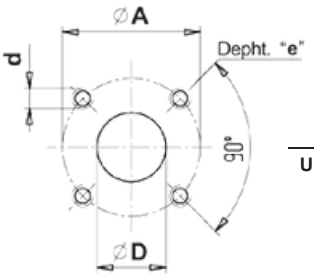

code B

Flanged ports
german standard

UNI-DIRECTIONAL PUMPS

TYPE	INLET				OUTLET			
	Ø D	Ø A	d	e	Ø D	Ø A	d	e
From 3.2 to 22.5	20 *(0.78")*	40 *(1.56")*	M6	13 *(0.51")*	15 *(0.59")*	35 *(1.38")*	M6	13 *(0.51")*
26	22 *(0.87")*							

BI-DIRECTIONAL PUMPS Special version available on request.

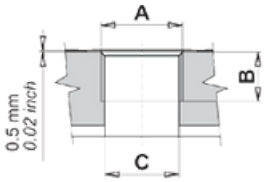

code G

Threaded ports
GAS (BSPP)

UNI-DIRECTIONAL PUMPS

TYPE	INLET			OUTLET		
	A	B	ØC	A	B	ØC
From 3.2 to 26	G3/4	16 *(0.62")*	20 *(0.78")*	G1/2	14 *(0.54")*	13 *(0.51")*

BI-DIRECTIONAL PUMPS Special version available on request.

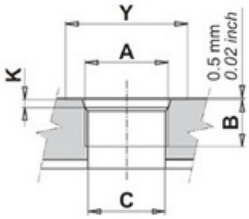

code R

Threaded ports
SAE (ODT)

UNI-DIRECTIONAL PUMPS

TYPE	INLET					OUTLET				
	A	B	ØC	Y	K	A	B	ØC	Y	K
From 3.2 to 26	1 1/16-12 UN (SAE 12)	16 *(0.62")*	20 *(0.78")*	41 *(1.61")*	3.3 *(0.12")*	7/8-14 UNF (SAE 10)	14 *(0.54")*	13 *(0.78")*	34 *(1.32")*	2.5 *(0.10")*

BI-DIRECTIONAL PUMPS Special version available on request.

E0.120.0219.02.00IM04

DRIIVE SHAFTS

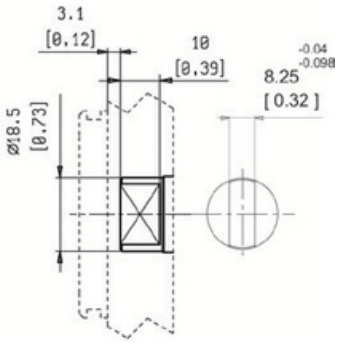

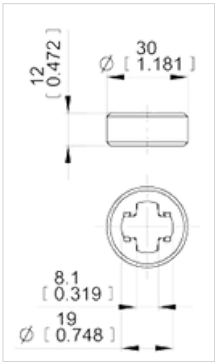

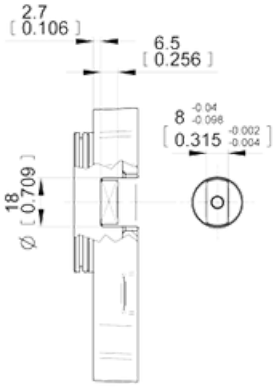

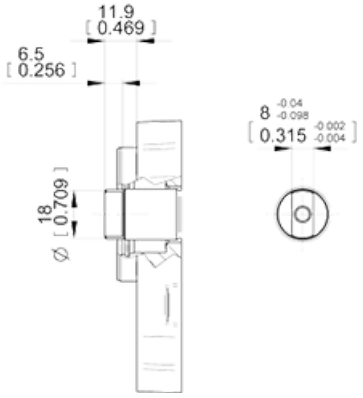

code 02	Max torque 70 (620 lbf in)
Tang drive for engine driven **For flange K1 without shaft seal**	

code 03	Max torque 70 Nm (620 lbf in)
Tangdrivefor electric motors **Without shaft seal**	

code 04	Max torque 70 Nm (620 lbf in)
Tang drive	

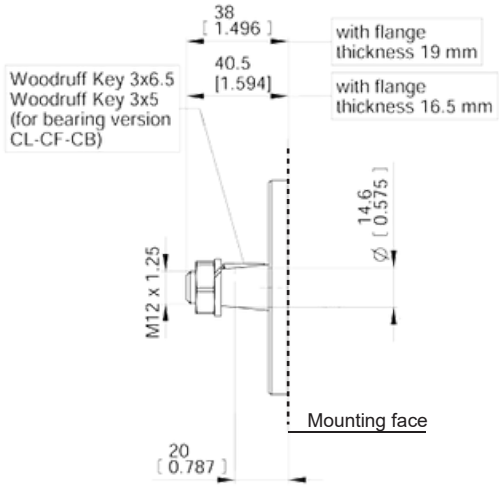

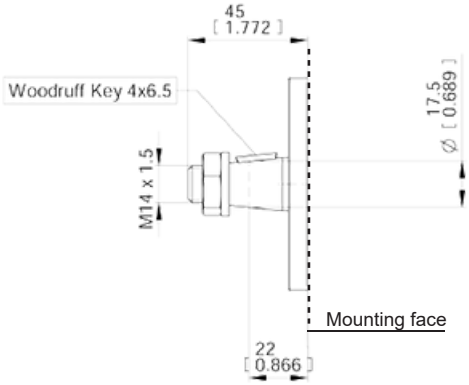

code 25	Max torque 130 Nm (1151 lbf in)
Tapered 1:5	

code 26	Max torque 100 Nm (885 lbt in)
Tapered 1:5 (only for CB)	

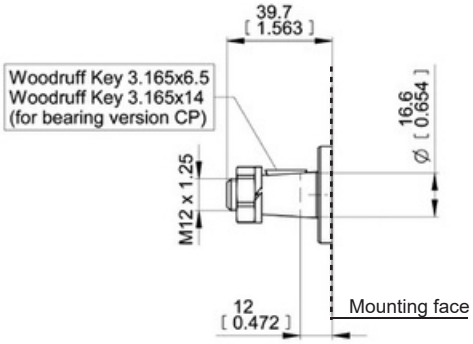

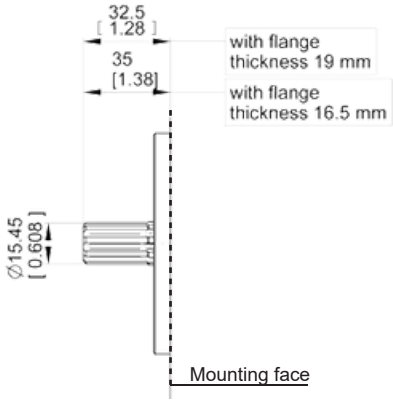

code 28	Max torque 130 Nm (1151 lbf in)
Tapered 1:8	

code 52	Max torque 100 Nm (885 lbt in)
SAE A 9T-16/32DP Ansi B92 1a 1976	

E0.120.0219.02.00IM04

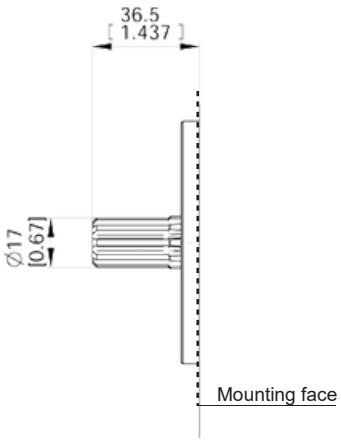

code 53	Max torque 125 Nm (1106 lbt in)
SAE A 10T-16/32DP Ansi B92 1a 1976	

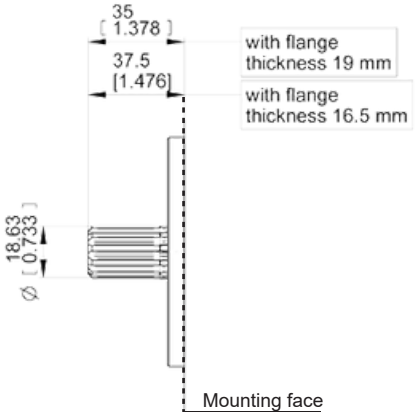

code 54	Max torque 150 Nm (1327 lbt in)
SAE A 11T-16/32DP Ansi B92 1a 1976	

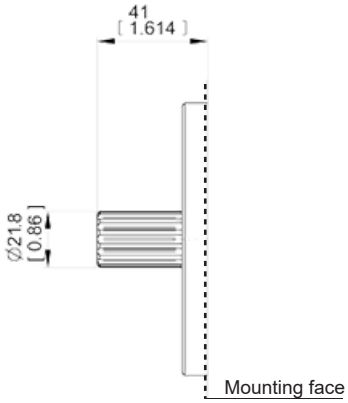

code 55	Max torque 100 Nm (885 lbt in)
SAE B 13T-16/32DP Ansi B92 1a 1976	

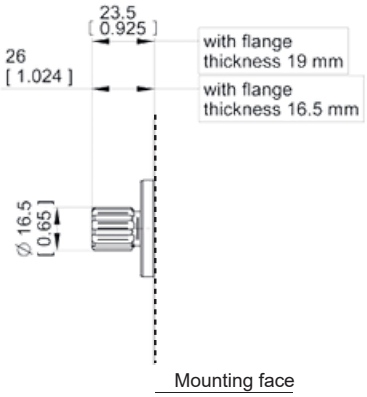

code 62	Max torque 120 Nm (1062 lbt in)
9 teeth DIN 5482 splined	

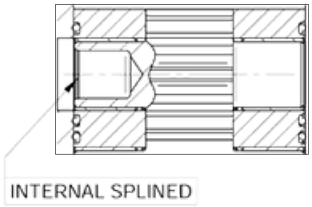

code 60	Max torque 100 Nm (885 lbt in)
DIN 5480 internal splined (only for rear pumps)	

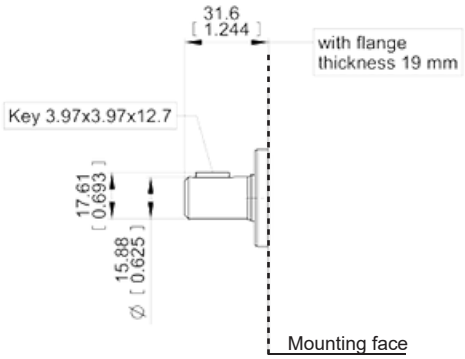

code 82	Max torque 70 Nm (620 lbt in)
5/8" SAE A parallel	

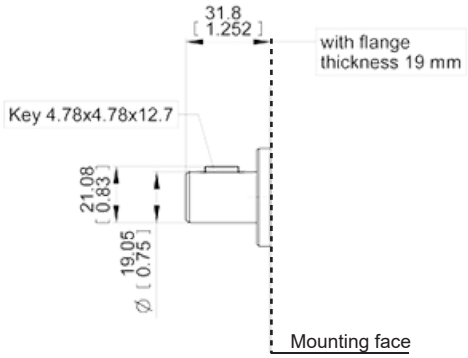

code 85	Max torque 130 Nm (1151 lbt in)
3/4" SAE A parallel	

MOUNTING FLANGES

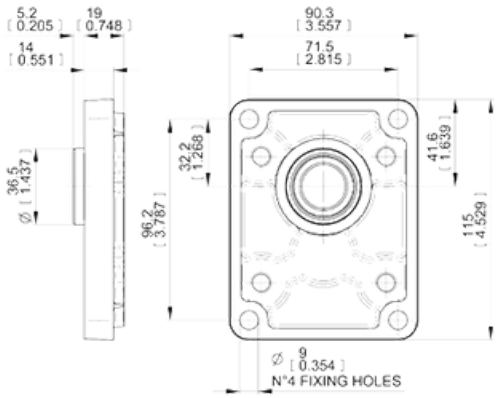

P1	European standard
With shaft code 28-62-82	

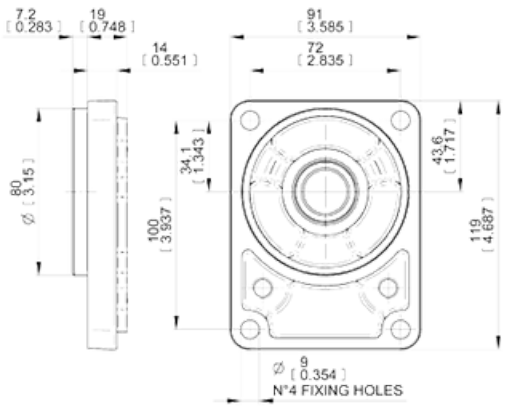

B1	German standard
With shaft code 25-62	

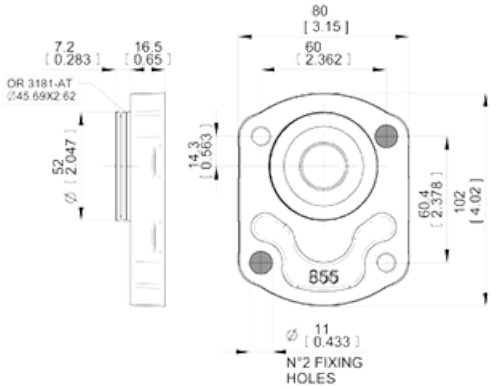

B2	German standard
With shaft code 03	

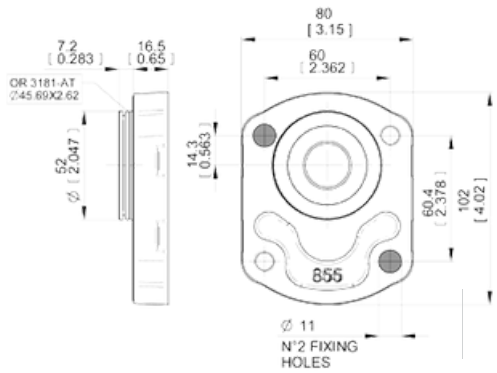

B3	German standard
With shaft code 03	

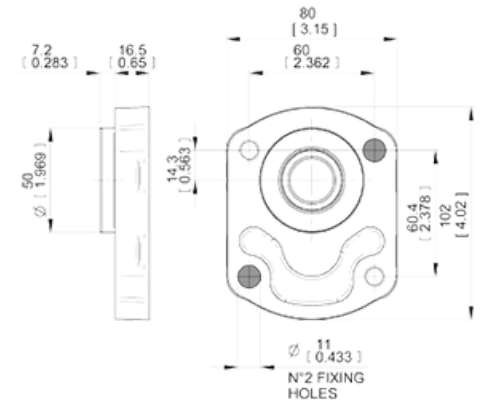

B4	German standard
With shaft code 25-62-04	

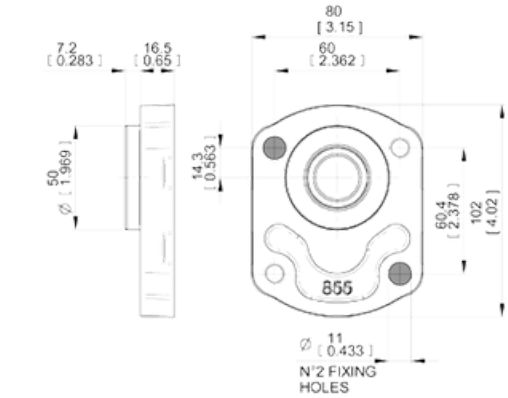

B5	German standard
With shaft code 25-62-04	

E0.120.0219.02.00IM04

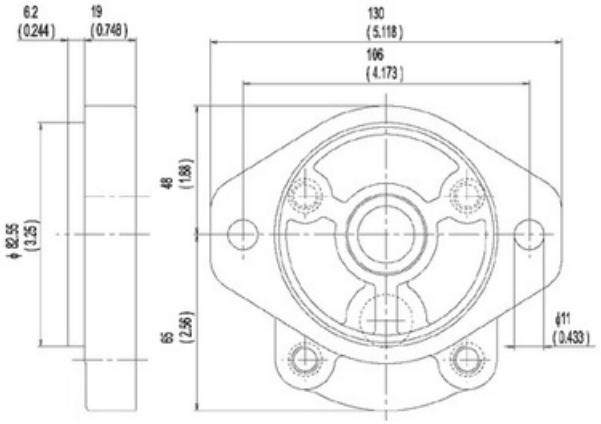

S2	SAE A 2 bolts
With shaft code 52-53-54-82-85	

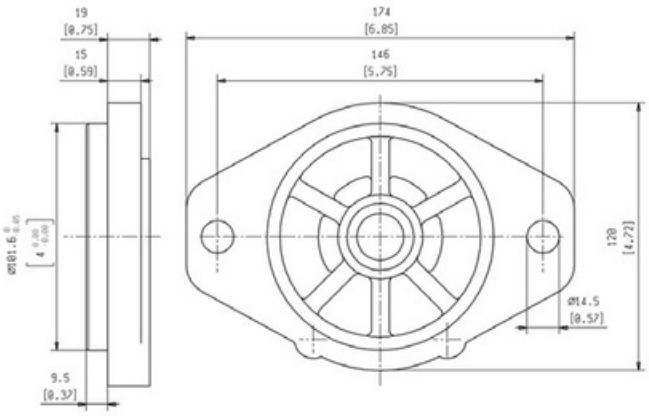

S3	SAE B 2 bolts
With shaft code 55	

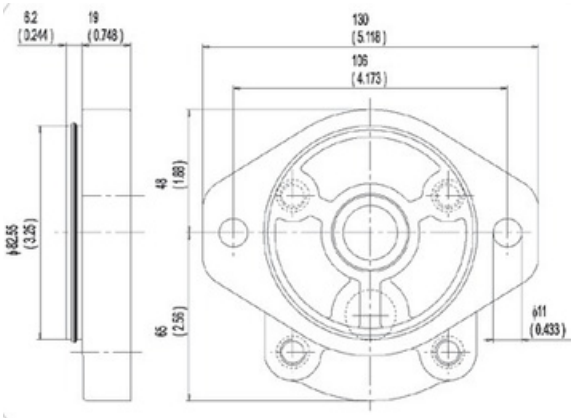

S6	SAE A 2 bolts (with O-ring on the centering collar)
With shaft code 52-54-82-85	

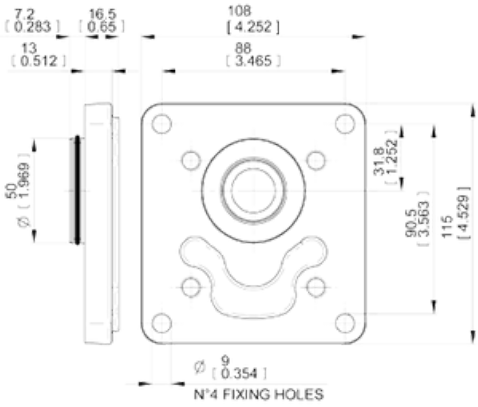

C1	4 bolts for Iveco engines
With shaft code 62	

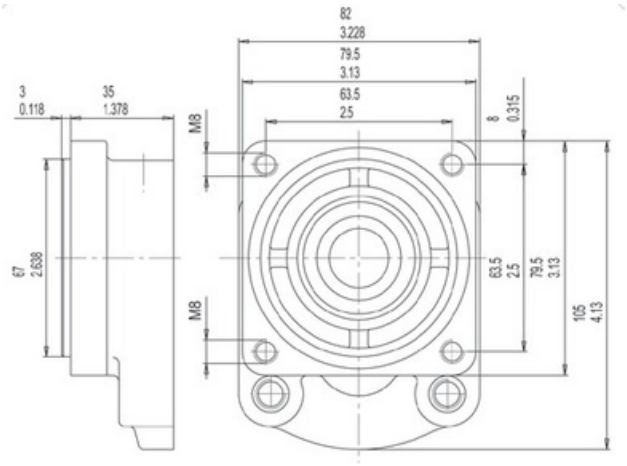

K1	4 bolts for Perkins Motor
With shaft code 02	

E0.120.0219.02.00IM04

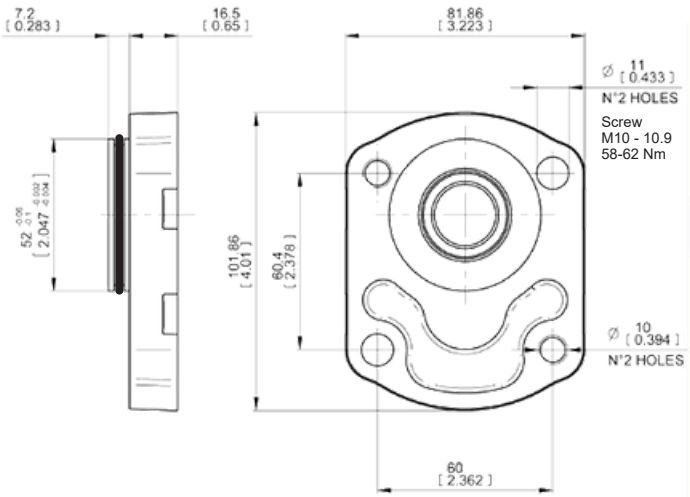

K3	German standard with shaft seal
With shaft code 52	

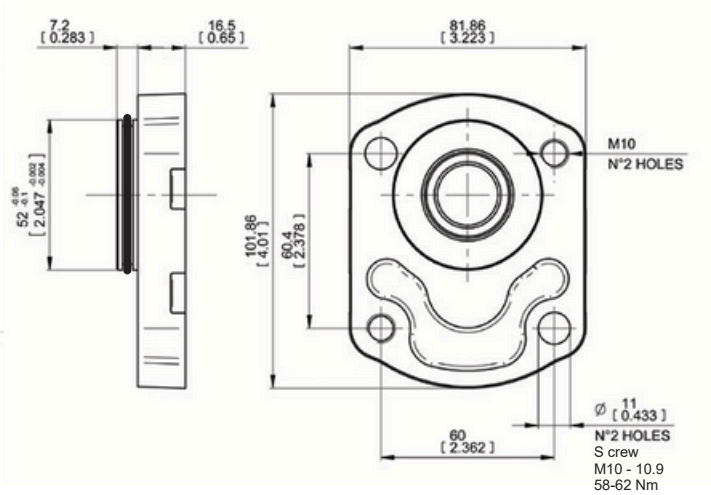

K4	German standard with shaft seal
With shaft code 52	

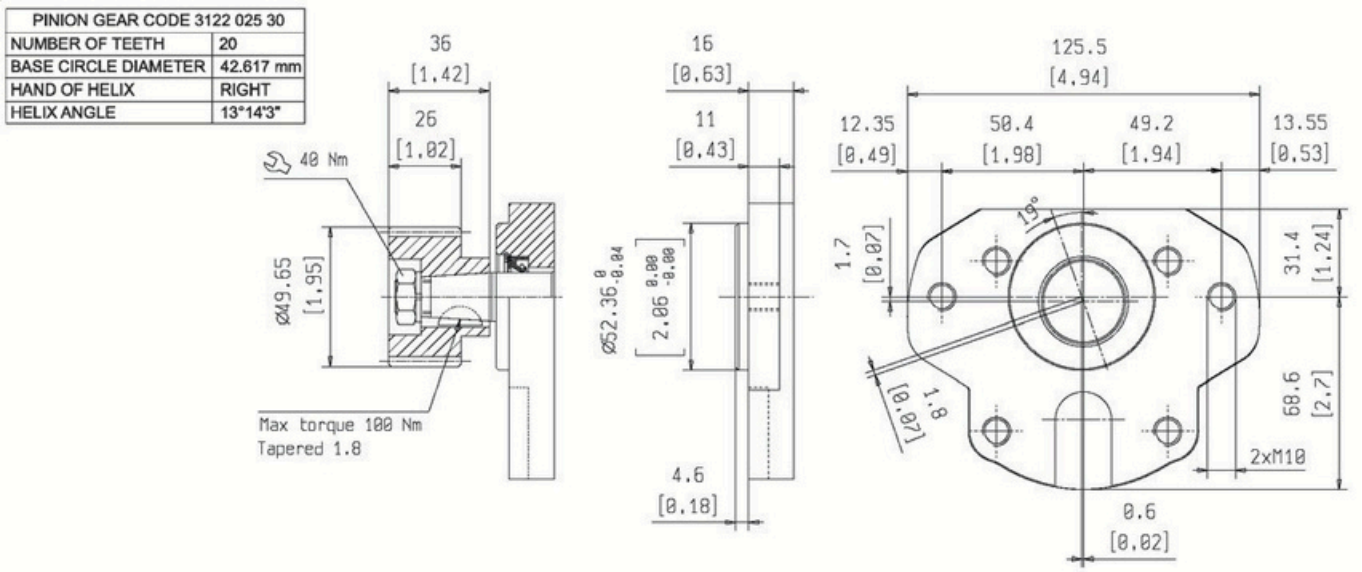

MF	Perkins Motor
With shaft code 28	

E0.120.0219.02.00IM04

OUTRIGGER BEARING

The following diagrams show radial load capability of the bearing.
Calculation according to ISO 281 at 10 cSt.

TYPE	H
4.5	47.1 (*1.83"*)
6.5	49.95 (*1.97"*)
8.3	52.8 (*2.08"*)
10.5	56.3 (*2.22"*)
11.3-12.5	59.7 (*2.35"*)
13.8	63.5 (*2.5"*)
16	67.5 (*2.66"*)
19	75.6 (*2.97"*)
22.5	81 (*3.19"*)
26	86.6 (*3.42"*)

L=Distance between mounting flange and radial force point of application.

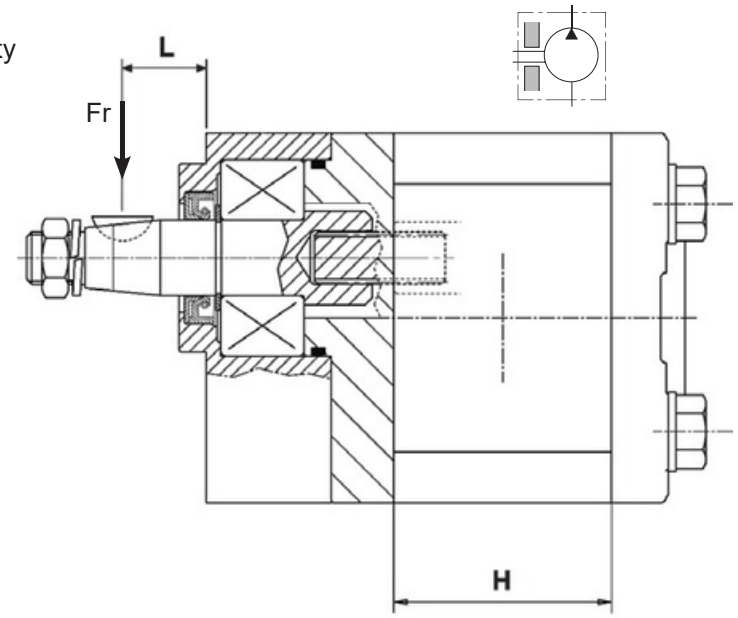

Example:
Fr = 1700 N
L = 7.5 → Expected life: 1000 hrs
Speed = 2000 rpm

For Code CP-CB-CL-CS

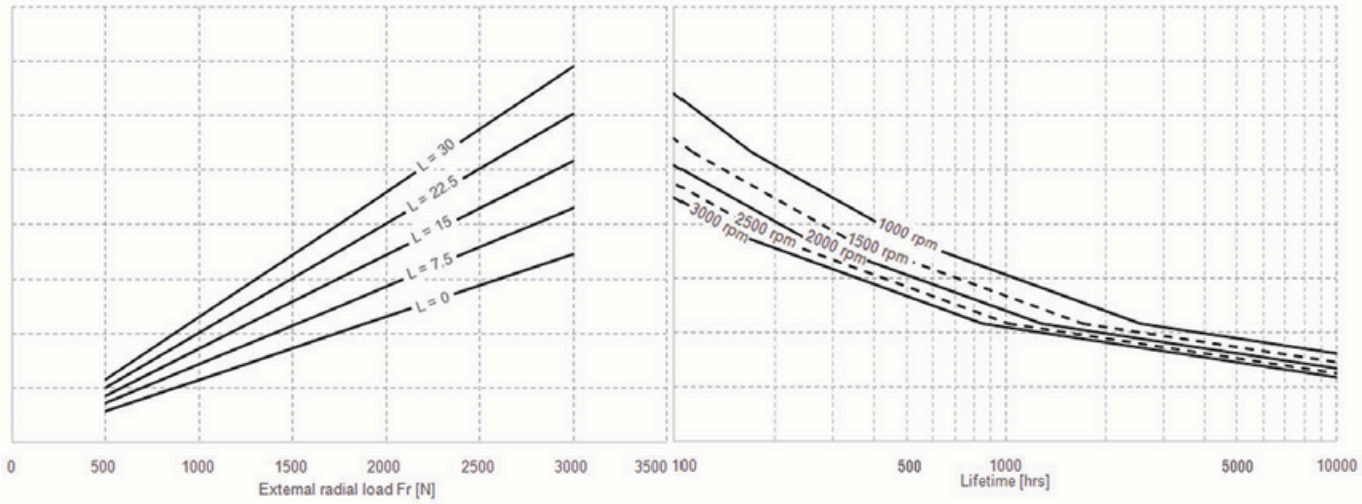

For Code CF

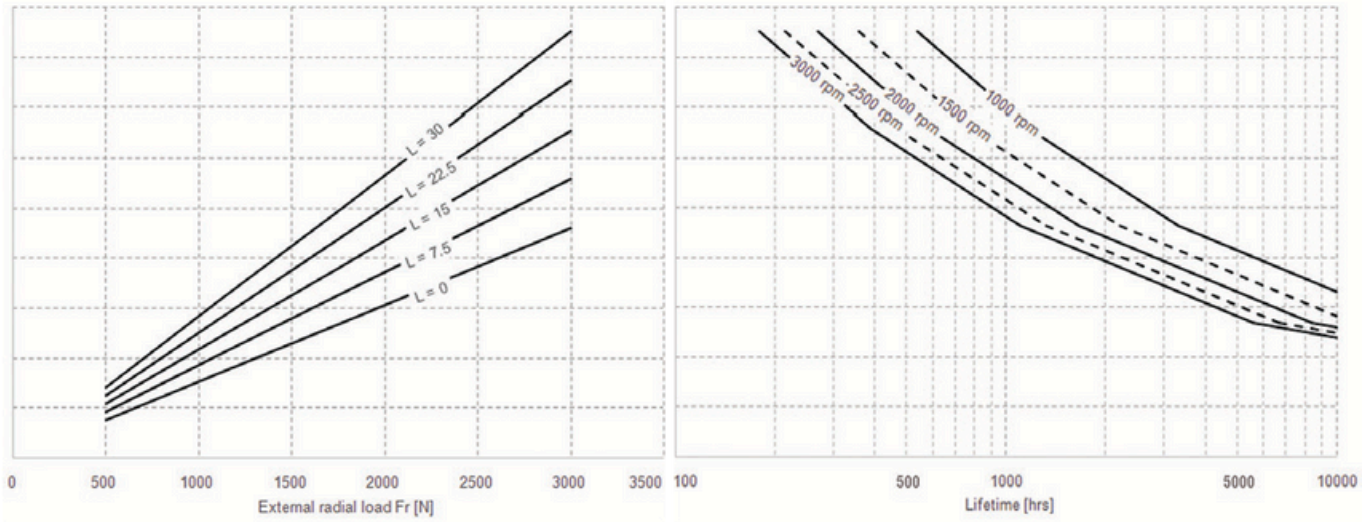

E0.120.0219.02.00IM04

ALUMINIUM MOUNTING FLANGES WITH BEARING

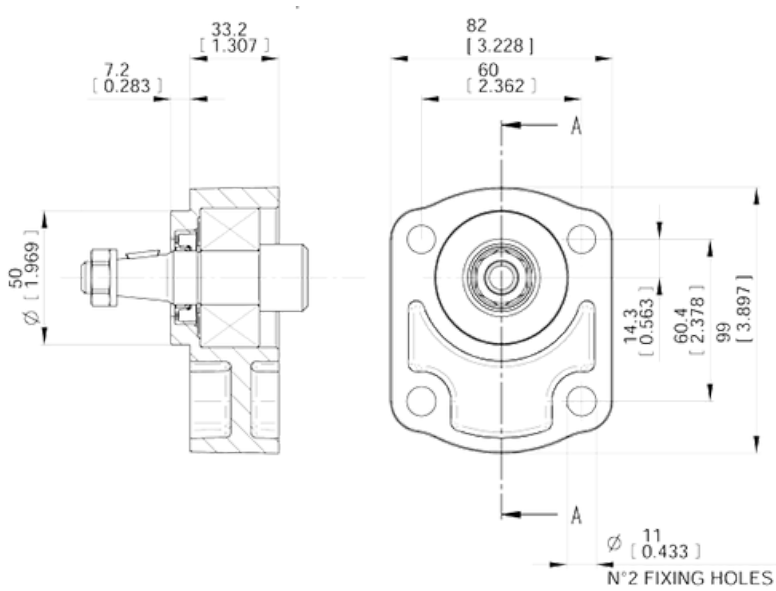

CL	For engine endothermic motors
With shaft code 25, 26 (see page 36)	

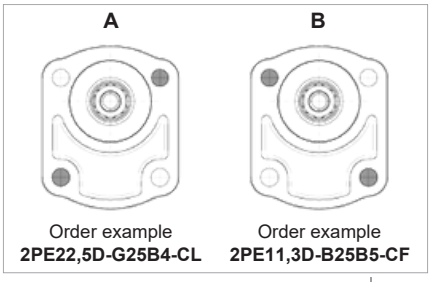

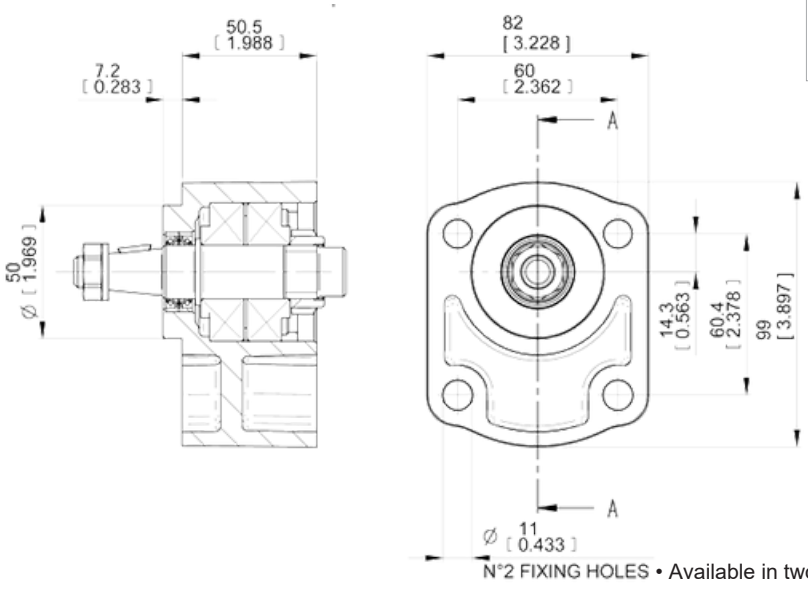

CF	For endothermic motors
With shaft code 25-26 (see page 36)	

E0.120.0219.02.00IM04

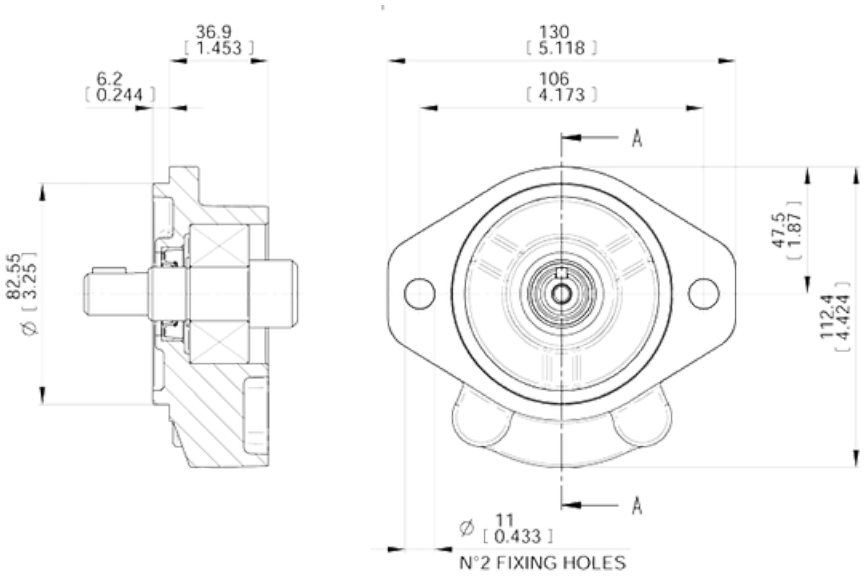

CS	SAE A
With shaft code 52-54-82-85 (see page 37)	

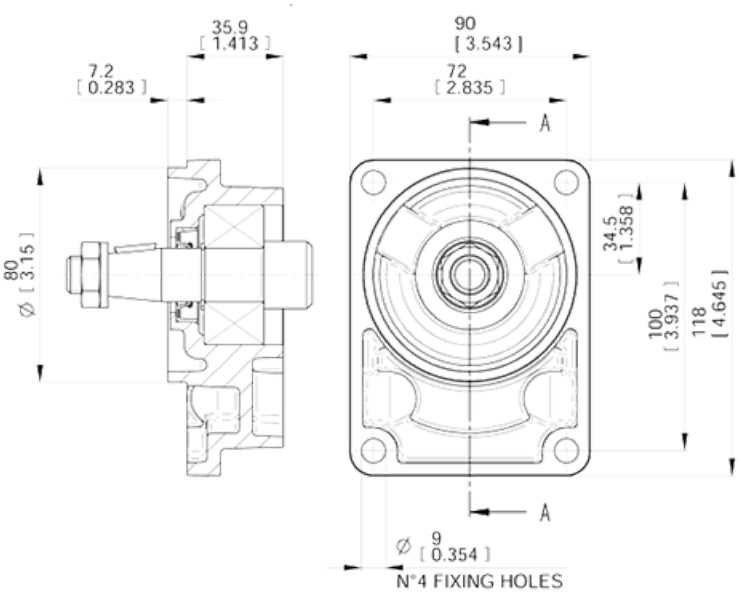

CB	German standard
With shaft code 25-26 (see page 37)	

E0.120.0219.02.00IM04

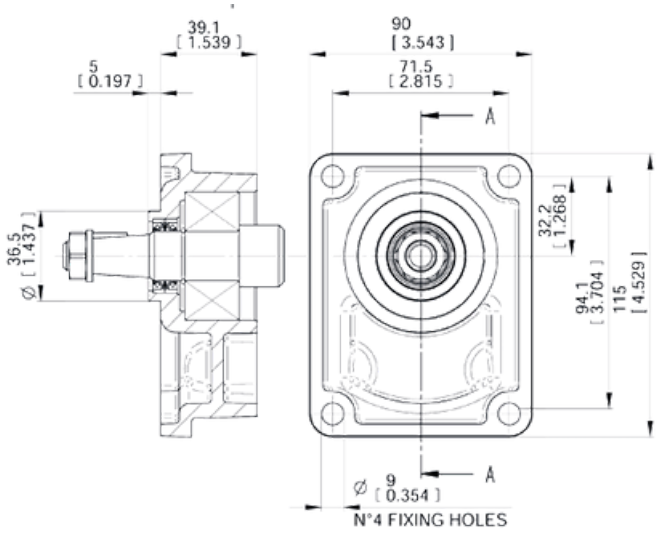

CP	European standard
With shaft code 28 (see page 36)	

E0.120.0219.02.00IM04

REAR COVERS

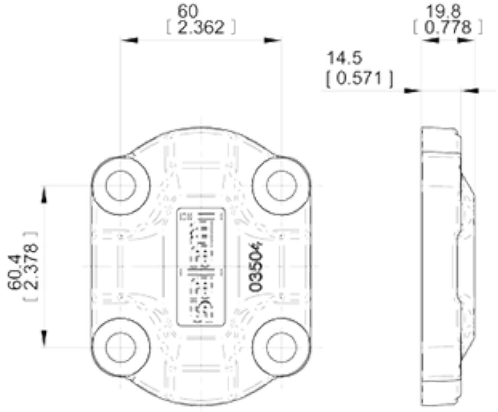

STANDARD REAR COVER

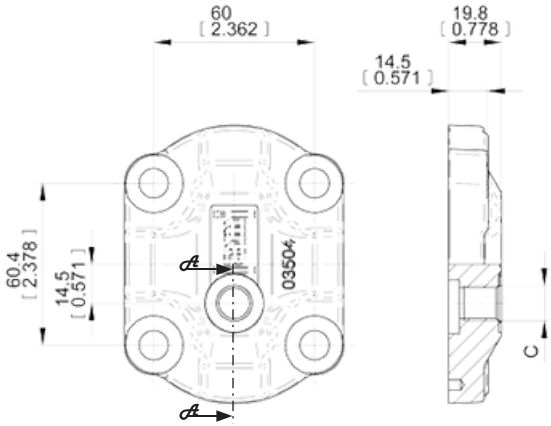

STANDARD REAR COVER WITH EXTERNAL DRAIN C
FOR BIDIRECTIONAL PUMPS

C
7/16-20 UNF-2B (SAE4)
G1/4

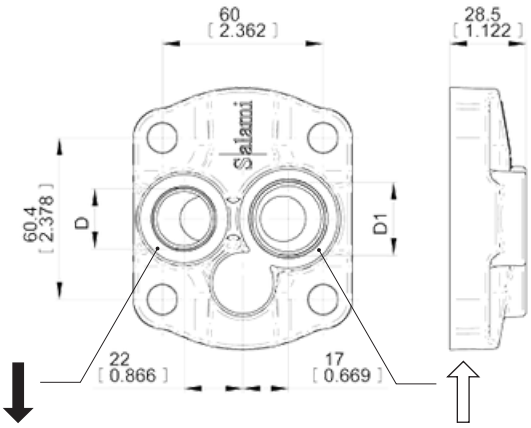

On request outlet port only.

D	D1
7/8-14 UNF-2B (SAE10)	1-1/16-12 UN-2B (SAE12)
G1/2	G3/4

code 1 REAR COVER WITH REAR PORTS

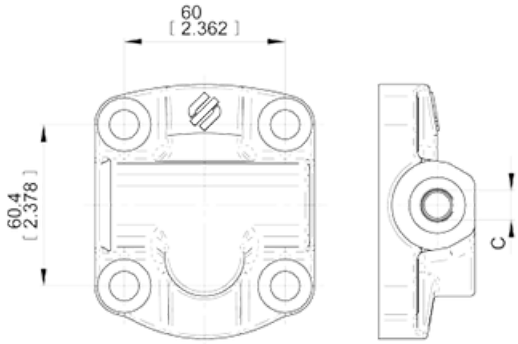

C
7/16-20 UNF-2B (SAE4)
G1/4

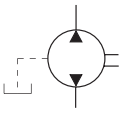

code LD REAR COVER WITH LATERAL DRAIN

E0.120.0219.02.00IM04

REAR ECAORV CEORVSE WRIST HW IRTEHL VIEAFLV VEALVE

code VS INTERNAL DISCHARGE

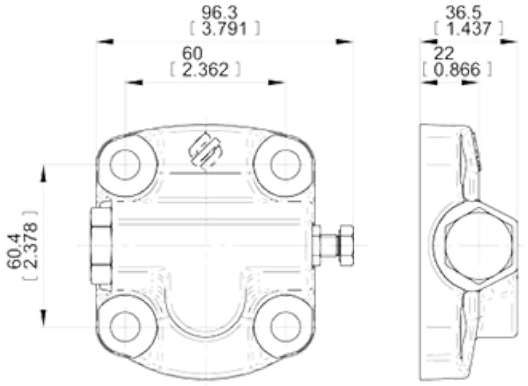

MAINRELIEFVALVE
setting ranges

30-60 bar

61-120 bar

121-170 bar

171-250 bar

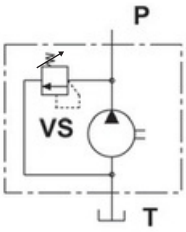

code VSE EXTERNAL DISCHARGE

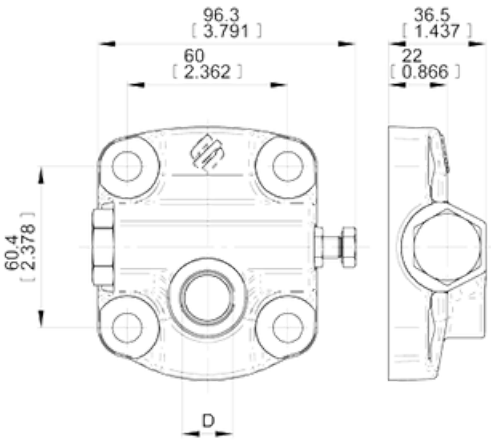

D (external discharge)
M18x1.5 (METRIC)
3/4-16 UNF-2B (SAE 8)
G3/8 (BSPP)

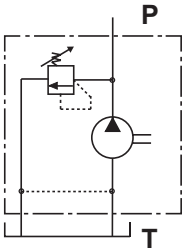

External discharge

code IDV REAR COVERS WITH INTERNAL DRAIN

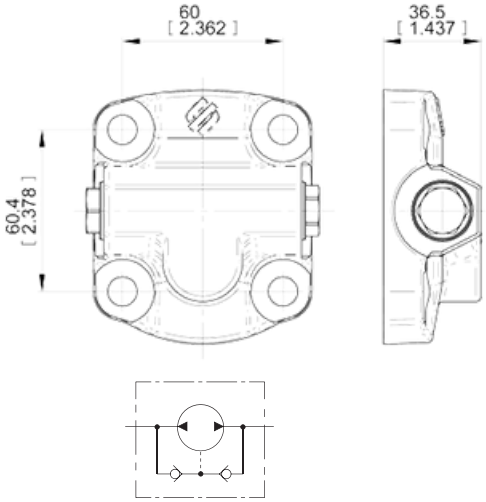

E0.120.0219.02.00IM04

HIGH-LOW MULTIPLE PUMP

High-Low Multiple Pump is the very ideal pump for applications which require a quick approach and/or return of the actuator at low loads and slow motion of the actuator at high loads. This model offers the advantage of requiring lower power of the motor. High-Low Multiple Pumps is a special double stage pump with integrated valves and has been specially designed for applications such as trash compactors, log splitters, clamping mechanisms, crimping machines, metal forming machines etc.

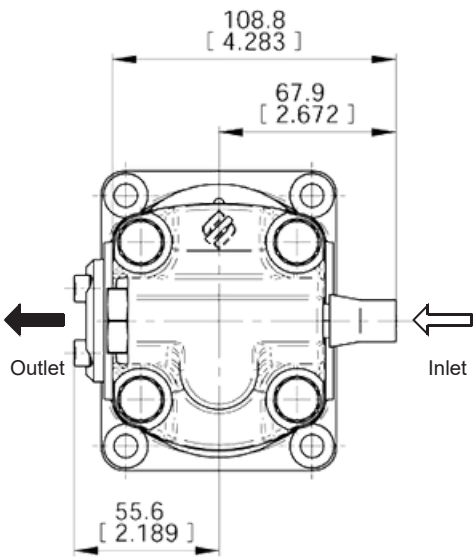

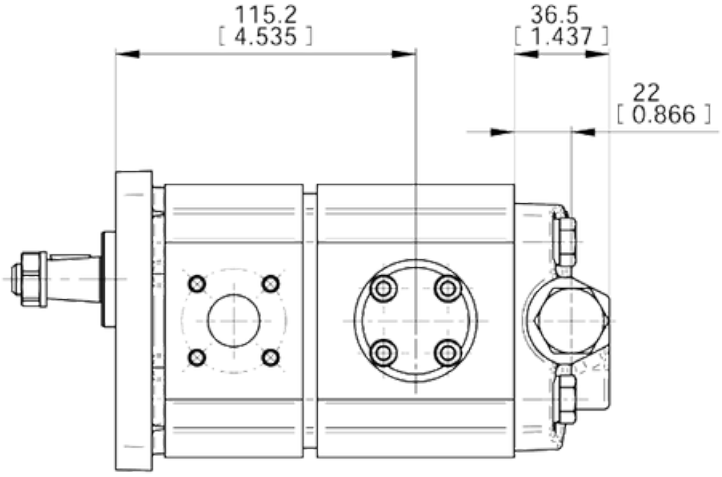

code VSQ

For this Unloading valve you can choice four setting ranges:
(30-60 bar)
(60-120 bar)

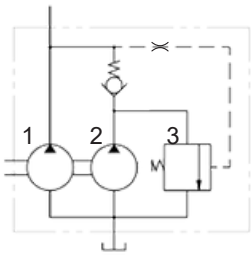

1_Stage high pressure
2_Stage low pressure
3_Unloading valve

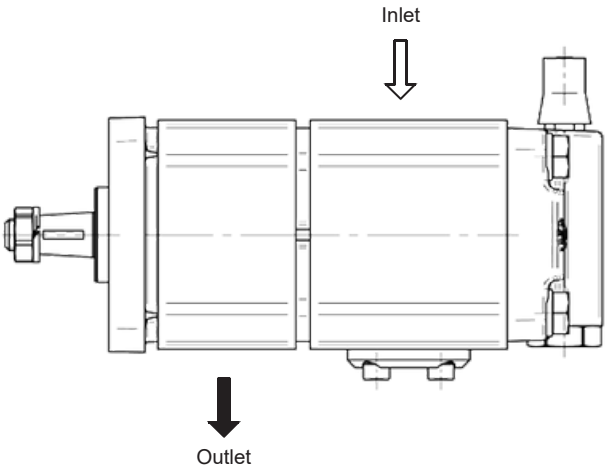

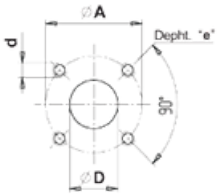

code B

Flanged ports
german standard

REAR STAGE LOW PRESSURE					FIRST STAGE HIGH PRESSURE				
TYPE	INLET				TYPE	OUTLET			
	Ø D	Ø A	d	e		Ø D	Ø A	d	e
From 8.3 to 19	20 *(0.78")*	40 *(1.56")*	M6	13 *(0.51")*	From 4.5 to 6.5	15 *(0.59")*	35 *(1.38")*	M6	13 *(0.51")*
From 22 to 26	22 *(0.87")*	55 *(2.16")*	M8		From 8.3 to 16	20 *(0.78")*	40 *(1.56")*		

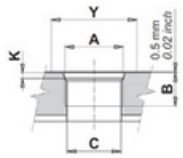

code R

Threaded ports
SAE (ODT)

REAR STAGE LOW PRESSURE						FIRST STAGE HIGH PRESSURE					
TYPE	INLET					TYPE	OUTLET				
	A	B	ØC	Y	K		A	B	ØC	Y	K
From 8.3 to 26	1-5/16 12 UN (SAE16)	16 *(0.62")*	20 *(0.78")*	41 *(1.61")*	3.3 *(0.12")*	From 4.5 to 16	7/8-14 UNF (SAE 10)	14 *(0.54")*	13 *(0.78")*	34 *(1.32")*	2.5 *(0.10")*

E0.120.0219.02.00IM04

PRESSURE COMPENSATED PRIORITY FLOW VALVE

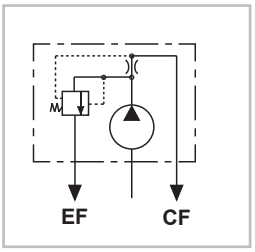

code VP | code VP1

Priority flow valve, excess flow to second actuator.

CF = Priority flow port
EF = Excess flow port

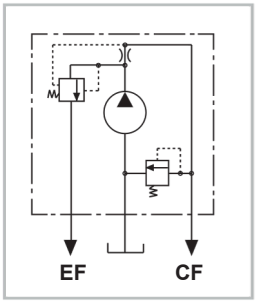

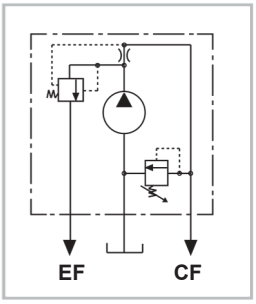

code VPS | code VPS1

Priority flow valve, excess flow to second actuator with pressure relief valve on priority flow line.

CALIBRATED ORIFICE Φ d (mm/*inch*)	FLOW RATE (l/min - gpm) ± 10%
1.5 */(0.06")*	*2.5 - (0.66)*
2 */(0.08")*	4 - *(1.06)*
2.4 */(0.09")*	6 - *(1.59)*
2.8 */(0.11")*	8 - *(2.11)*
3.1 */(0.12")*	10 - *(2.64)*
3.5 */(0.14")*	12.5 - *(3.30)*
4 */(0.16")*	16 - *(4.23)*
4.4 */(0.17")*	20 - *(5.28)*
4.9 */(0.19")*	25 - *(6.61)*

PRIORITY FLOW VALVE (VP - VPS)

3 Ways flow control priority valve. It ensures a constant flow to CF port, given by the screwed control orifice (see table) and regardless of the pump speed; the excess flow is available for other functions at the EF port. The two lines CF and EF can be loaded simultaneously and the max pressure of the priority line can be limited by a relief valve connected to the suction port.

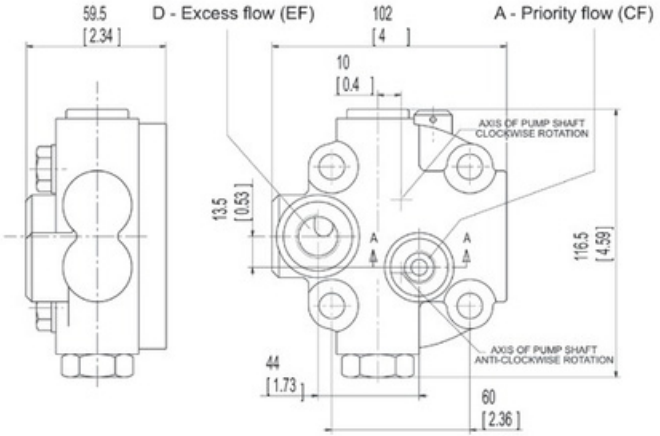

VP - VPS
REAR PORTS

A	D
G 3/8	G 1/2
SAE6 9/16-18 UNF-2B	SAE8 3/4 - 16 UNF - 2B

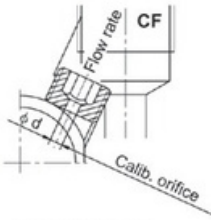

Det. SECT.A-A

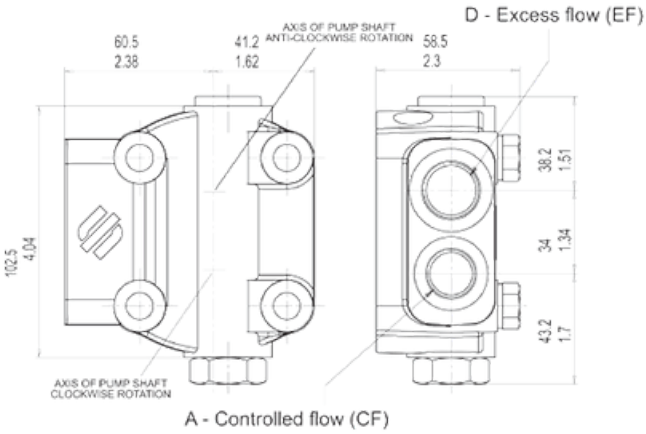

VP1 - VPS1
SIDE PORTS

A	D
G 3/8	G 1/2
SAE8 3/4 - 16 UNF - 2B	SAE10 7/8 - 14 UNF - 2B

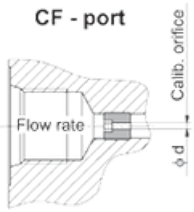

E0.120.0219.02.00IM04

LOAD SENSING PRIORITY VALVE

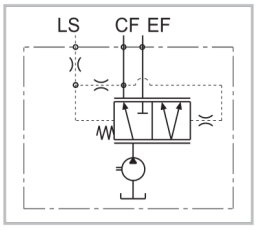

code VPD **code VPD1**

Load sensing priority valve with dynamic signal without main relief valve.

CF = Priority flow port
EF = Excess flow port
LS = Load sensing signal port

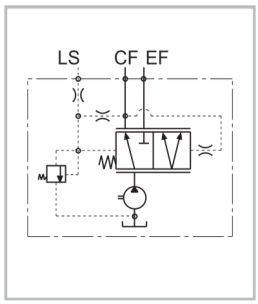

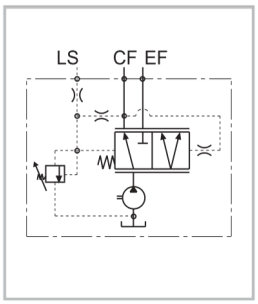

code VPDS **code VPDS1**

Load sensing priority valve with dinamic signal with main relief valve.

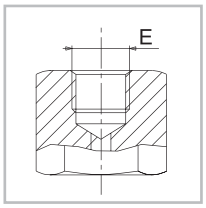

Female fitting

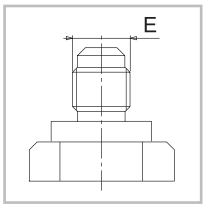

Male fitting

LOAD SENSING PRIORITY VALVES (VPD1-VPDS1)

The load sensing priority valve is a control valve able to divide the flow generated by the pump, coming from the port P, in two different flows named Qcf and Qef. The Qcf flow follows the user request, the flow Qefchanges according to the equation:

Qin = Qcf + Qef

This valve is used in hydraulic steering systems, theCF port is connected to the inlet of power steering unit while the other functions (lifter etc…) are connected to the EF port. The load sensing LS signal of the valve is connected to the LS of powersteering unit.
The regulated flow Qcf depends on the steering speed, the remaining flow Qef is available for the other funcions and complies with the equation

Qef = Qin – Qcf

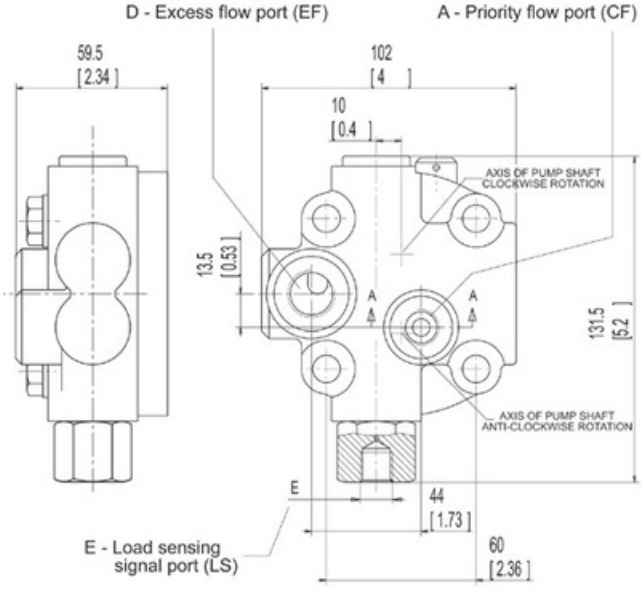

VPD - VPDS
REAR PORTS

Minimum load sensing signal (LS) = 4 bar (28 psi)

A	D	E
G 3/8	G 1/2	G 1/4
SAE6 9/16 - 18 UNF - 2B	SAE8 3/4 - 16 UNF - 2B	SAE4 7/16 - 20 UNF - 2B

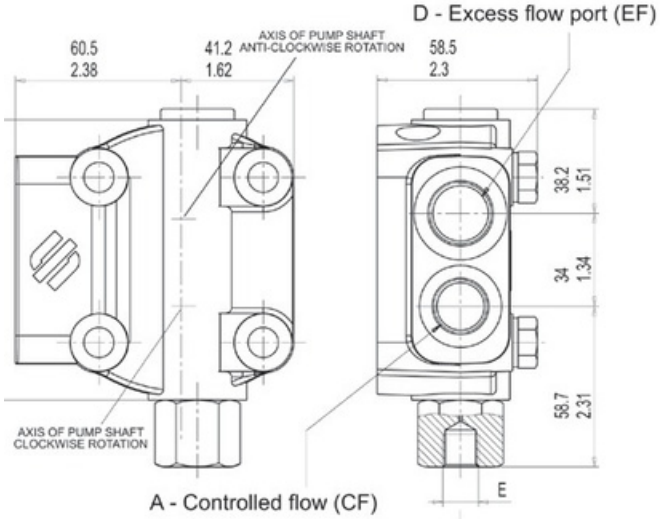

VPD1 - VPDS1
SIDE PORTS

Minimum load sensing signal (LS) = 4 bar (28 psi)

A	D	E
G 3/8	G 1/2	G 1/4
SAE8 3/4 - 16 UNF - 2B	SAE10 7/8 - 14 UNF - 2B	SAE4 7/16 - 20 UNF - 2B

E0.120.0219.02.00IM04

ELECTRIC UNLOADING VALVE

code EV

EV1 - 12 Vcc
EV2 - 24 Vcc

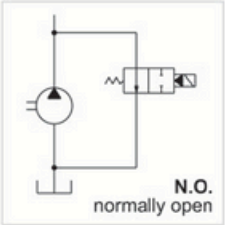

EV3 - 12 Vcc
EV4 - 24 Vcc

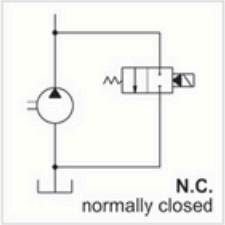

CONNECTOR DIN 43650 A/ISO 4400

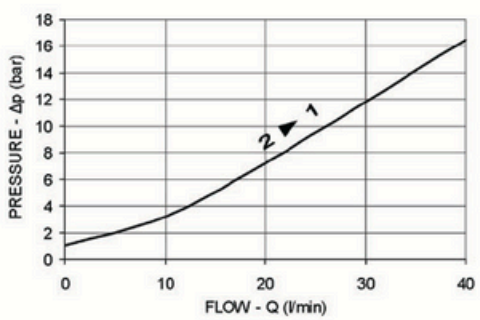

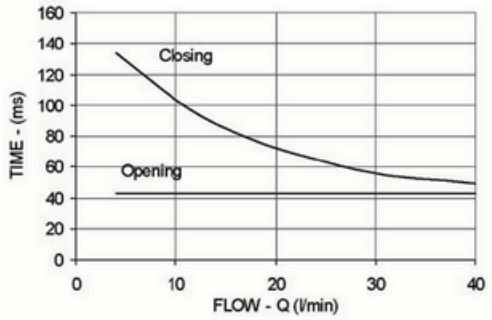

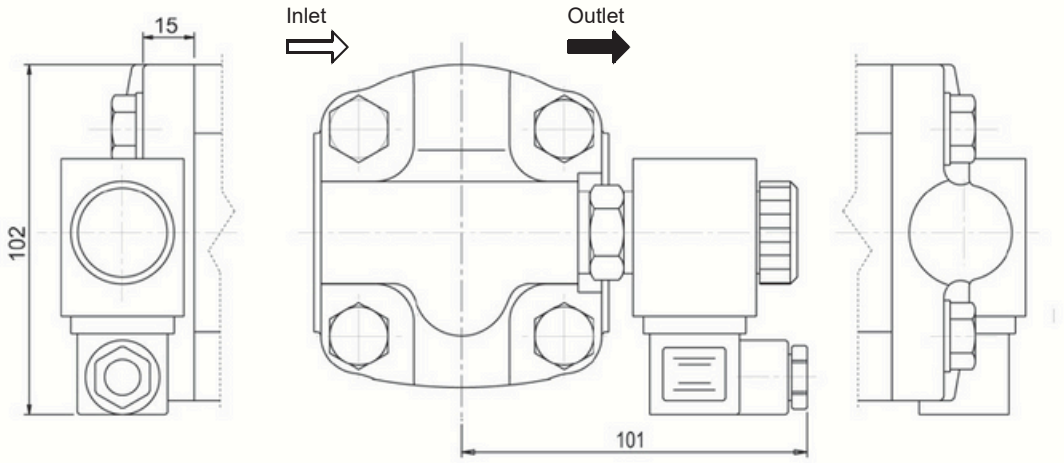

code EVS

EVS1 - 12 Vcc
EVS2 - 24 Vcc

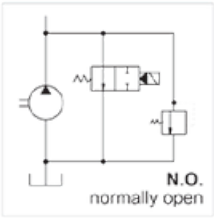

EVS3 - 12 Vcc
EVS4 - 24 Vcc

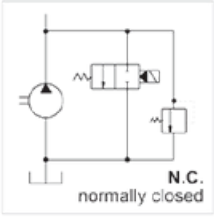

Cover with built-in relief and electric unloading valve

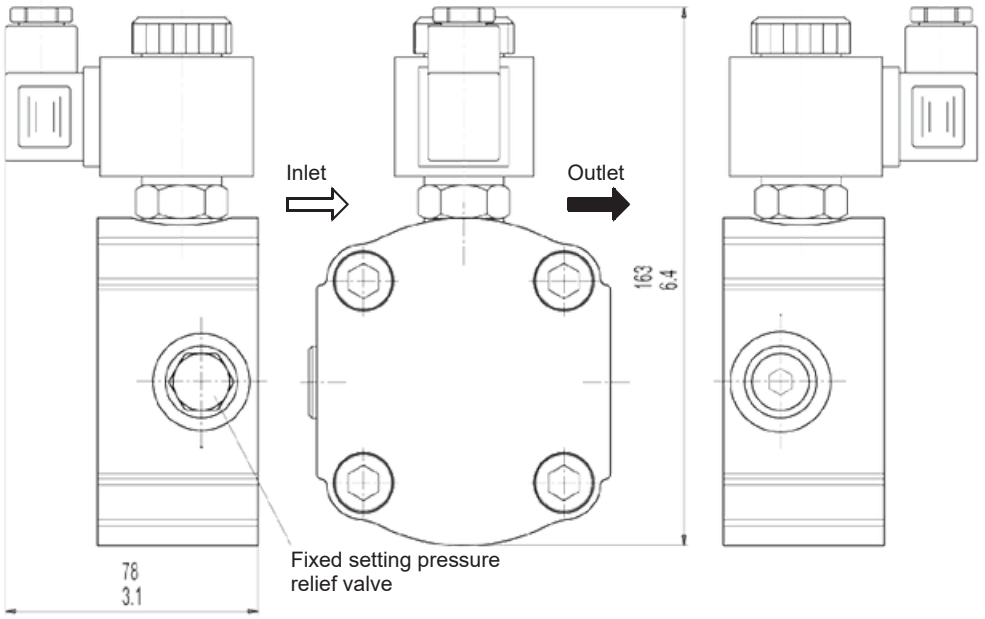

E0.120.0219.02.00IM04

MULTIPLE GEAR PUMPS ASSEMBLING DIMENSIONS

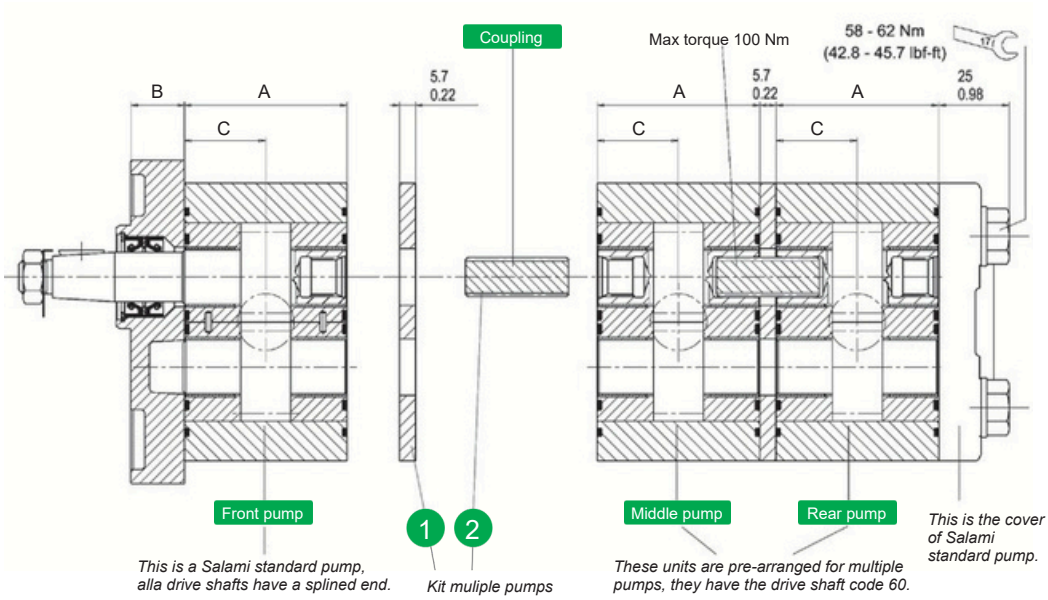

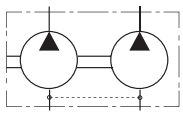

MULTIPLE GEAR PUMPS with inlet port on each body

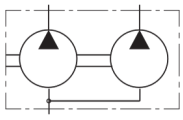

MULTIPLE GEAR PUMPS with common inlet port*

*In case of common inlet port, to avoid too high value of oil speed, 30 l/min is the max. sucked flow for the downstream pump. Commercial code **UA**.

The 2PE pumps can be easily transformed into front pump in the multiple units. All drive shafts are pre-arranged and have a splined end according DIN 5480. The first unit must always be the same size or bigger than following units. The features and performances are the same of the corresponding single units: only in the case of simultaneous operating you have to verify that the inlet torque is lower than the max. transmissible by the drive shaft. Finally to assembly the multiple pump you need to order bolts of the right length.

Type		3.2*	3.9*	4.5	6.5	8.3	10.5	11.3	12.5	13.8	16	19	22.5	26
Dimension B (flanges B2 - B3)	mm *in*	16.5 *0.65*												
Dimension B (flanges P1 - S2 - B1)	mm *in*	19 *0.75*												
Dimension C	mm *in*	23.55 *0.91*			25 *0.98*	26.4 *1.04*	28.15 *1.11*	29.75 *1.17*		31.75 *1.25*	33.75 *1.33*	37.8 *1.49*	40.5 *1.59*	43.4 *1.71*
Dimension A	mm *in*	47.1 *1.83*			49.95 *1.97*	52.8 *2.07*	56.3 *2.22*	59.7 *2.35*		63.5 *2.5*	67.5 *2.65*	75.6 *2.97*	81 *3.19*	86.8 *3.42*

*Available only as rear pump

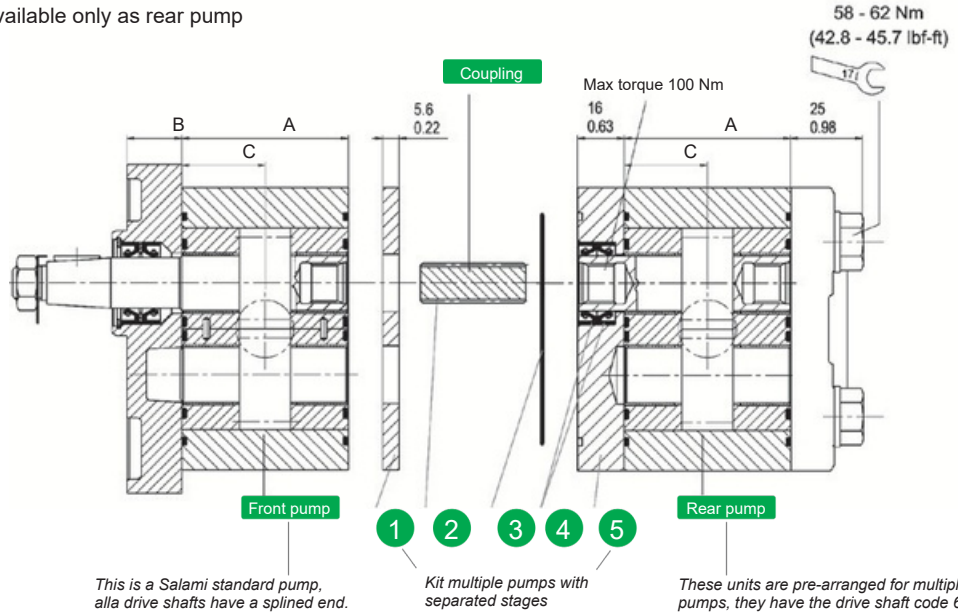

code AS

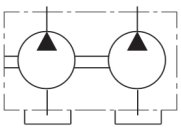

MULTIPLE GEAR PUMPS with separated stages

E0.120.0219.02.00IM04

2PE COMBINATION WITH PUMP 1.5PE

PD1.5

Kit multiple pumps
Pre-arranged for 1.5PE rear

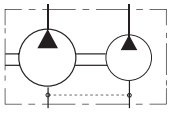

MULTIPLE GEAR PUMPS with inlet port on each body

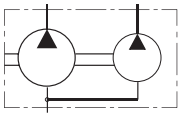

MULTIPLE GEAR PUMPS with common inlet port*

*In case ofcommon inlet port, to avoid too high value of oil speed, 12 l/min is the max. sucked flow for the downstream pump. Commercial code **UA**.

ALL THE PUMPS CAN BE ALSO MULTIPLE

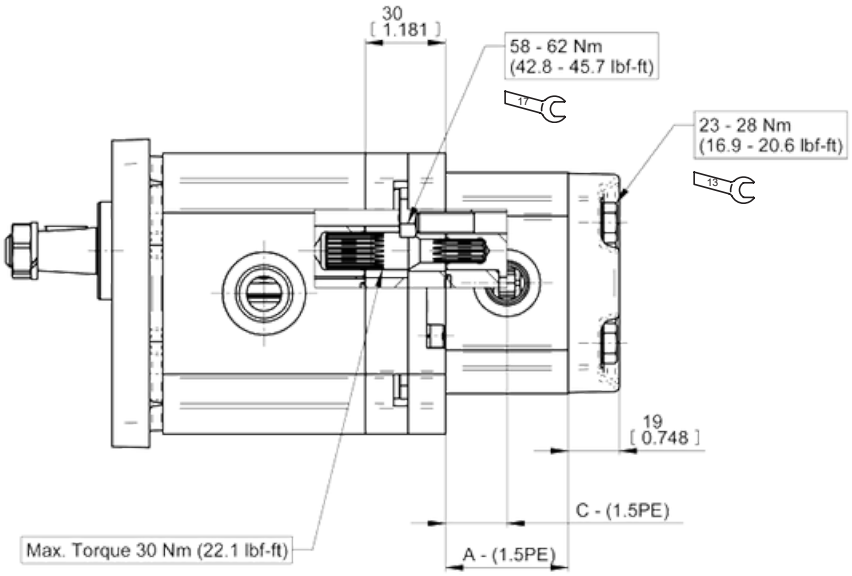

1.5PE-Type		1.4	2.1	2.8	3.5	4.1	5.2	6.2	7.6	9.3	11
Dimension A - 1.5PE	mm	44	45.9	47.9	49.9	51.6	54.7	57.5	61.5	66.3	71.1
	in	*1.73*	*1.81*	*1.89*	*1.96*	*2.03*	*2.15*	*2.26*	*2.42*	*2.61*	*2.80*
Dimension C - 1.5PE	mm	22	22.95	23.95	24.95	25.8	27.35	28.75	30.75	33.15	35.55
	in	*0.87*	*0.90*	*0.94*	*0.98*	*1.02*	*1.08*	*1.13*	*1.21*	*1.31*	*1.40*

E0.120.0219.02.00IM04

PERFORMANCE CURVES

Performance curvescarriedoutwithoilviscosityat21cStandoiltemperature at 50°C

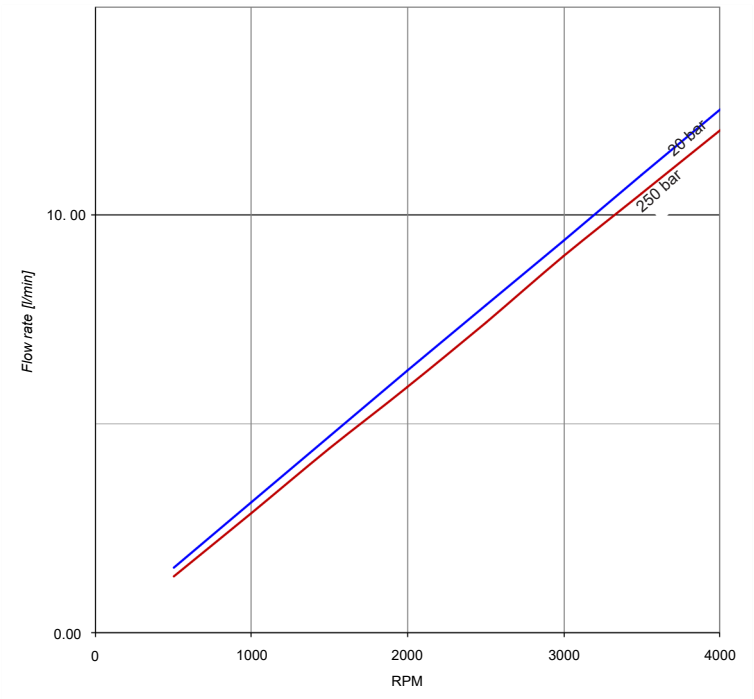

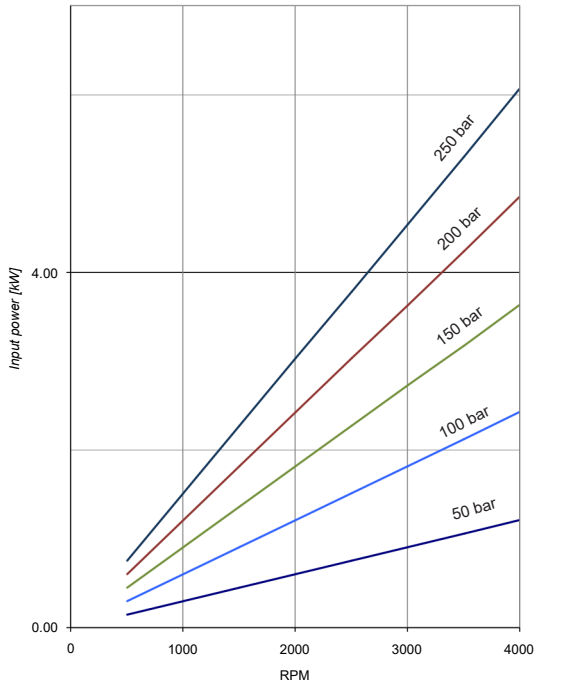

2PE - 3.2

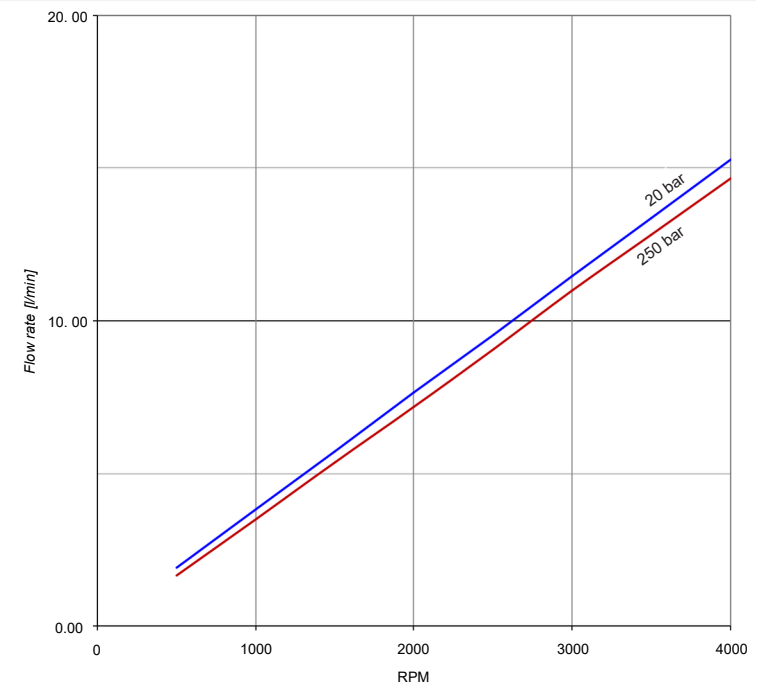

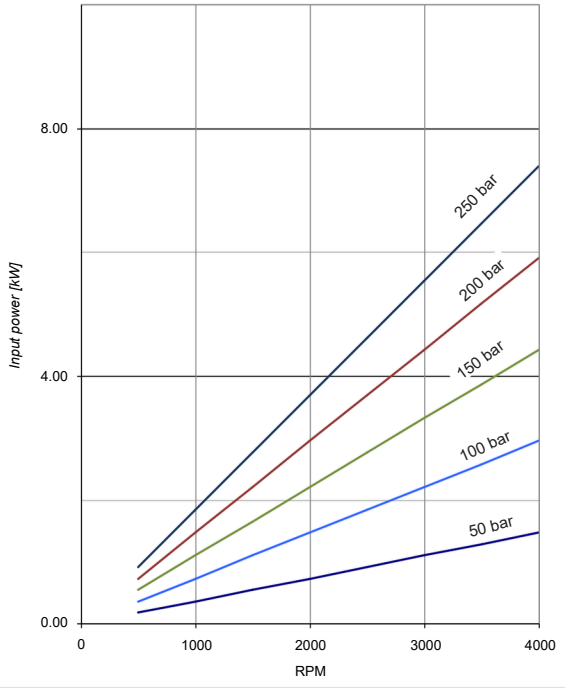

2PE - 3.9

E0.120.0219.02.00IM04

PERFORMANCE CURVES

Performance curvescarriedoutwithoilviscosityat21cStandoiltemperature at 50°C

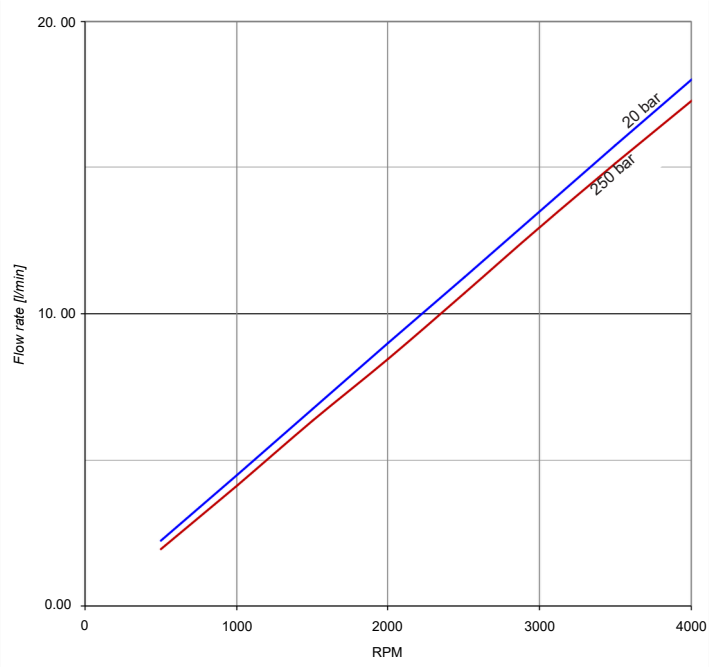

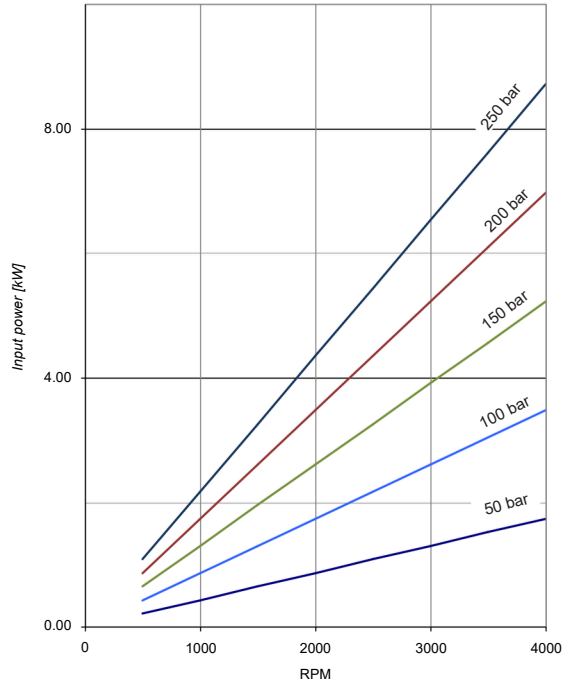

2PE - 4.5

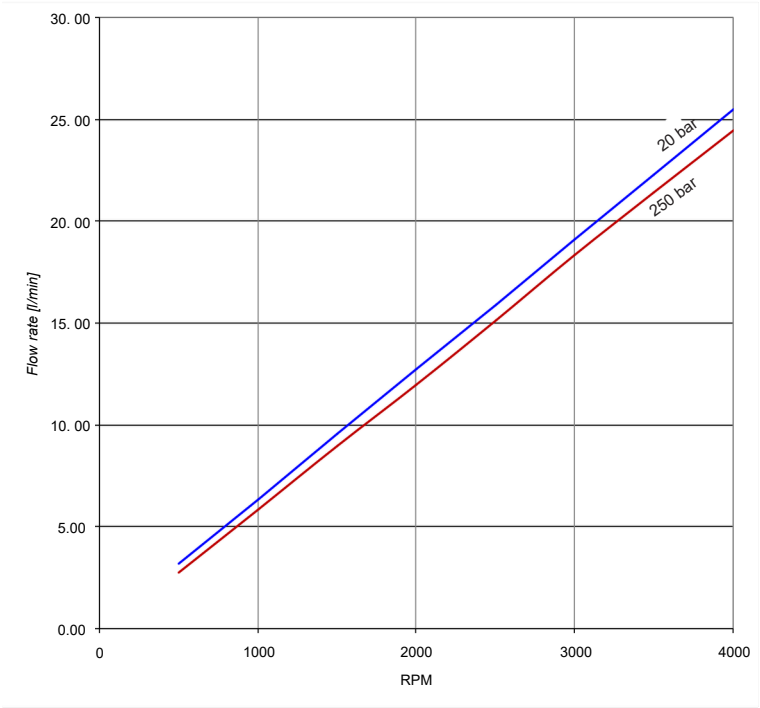

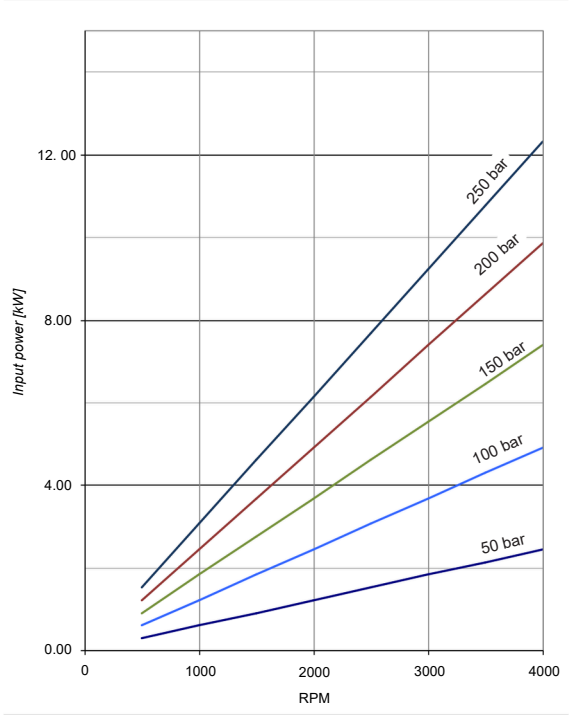

2PE - 6.5

E0.120.0219.02.00IM04

PERFORMANCE CURVES

Performance curvescarriedoutwithoilviscosityat21cStandoiltemperature at 50°C

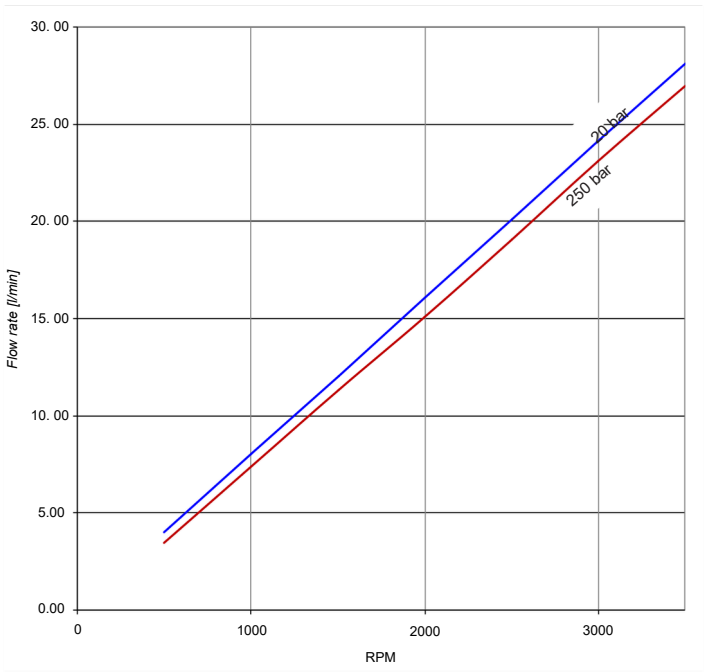

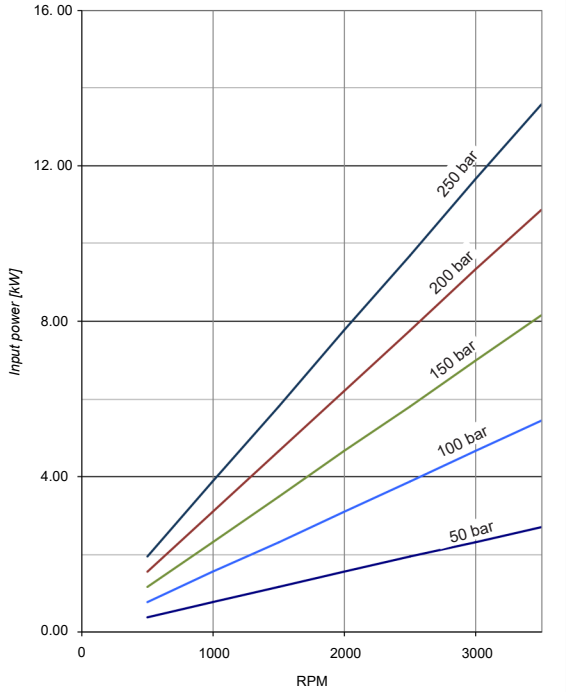

2PE - 8.3

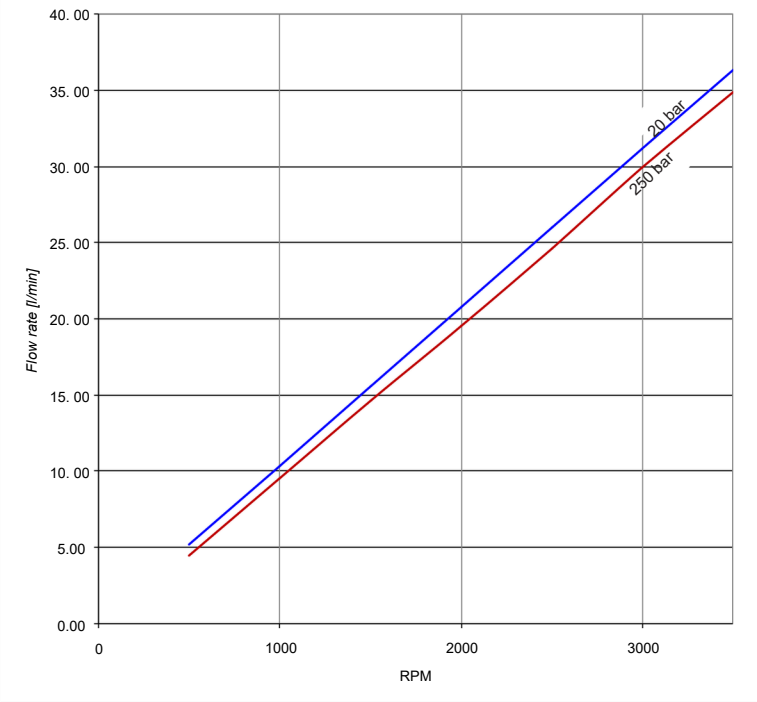

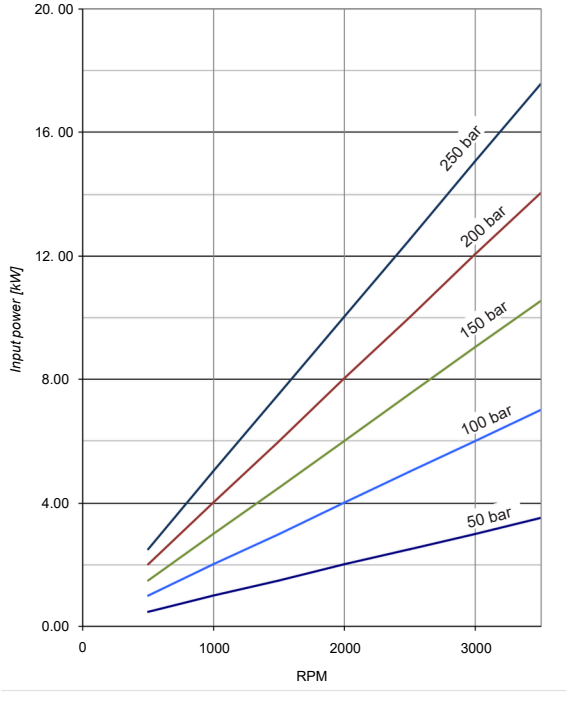

2PE - 10.5

E0.120.0219.02.00IM04

PERFORMANCE CURVES

Performance curvescarriedoutwithoilviscosityat21cStandoiltemperature at 50°C

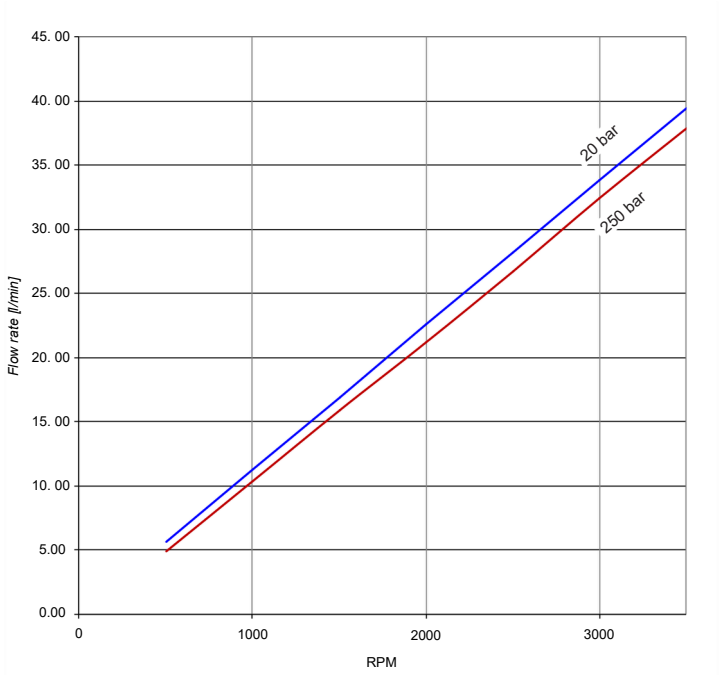

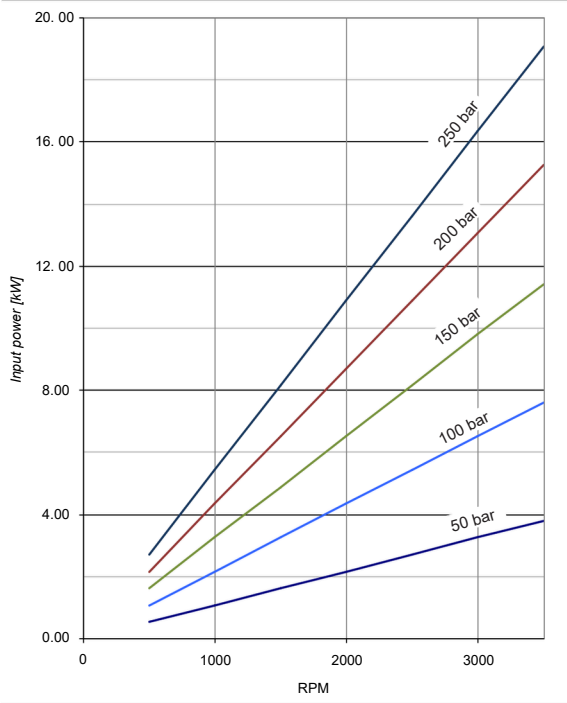

2PE - 11.3

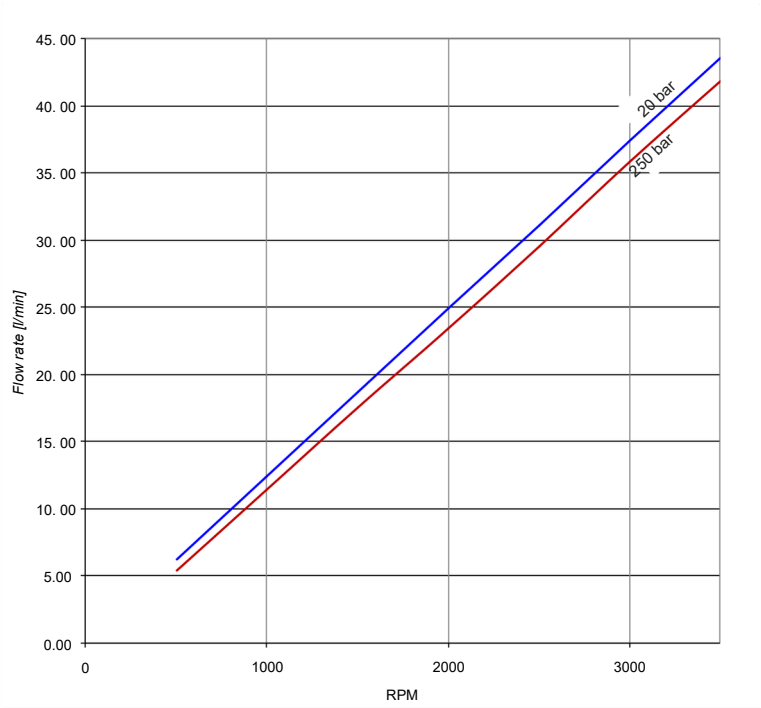

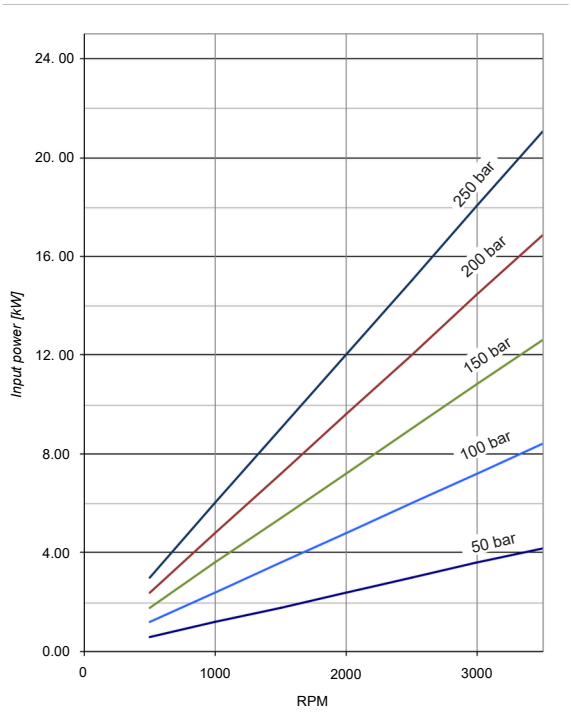

2PE - 12.5

E0.120.0219.02.00IM04

PERFORMANCE CURVES

Performance curvescarriedoutwithoilviscosityat21cStandoiltemperature at 50°C

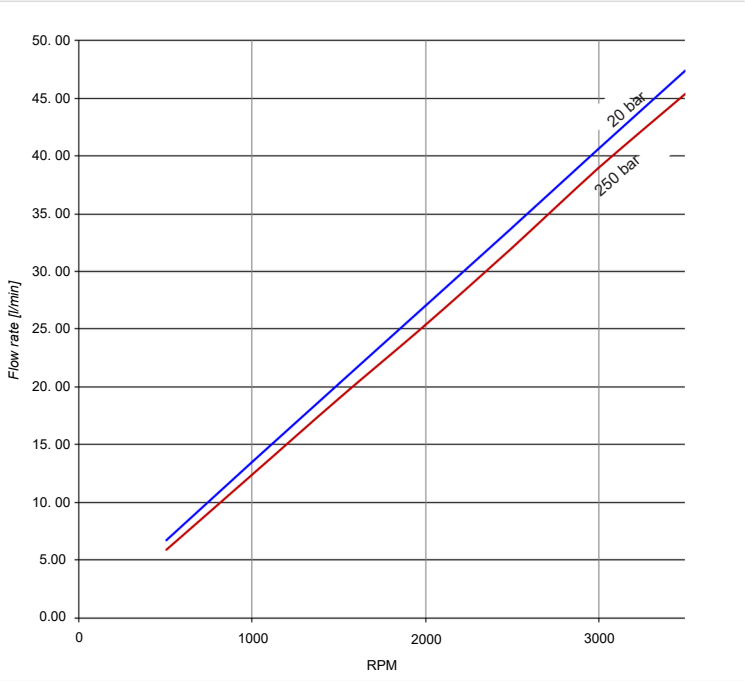

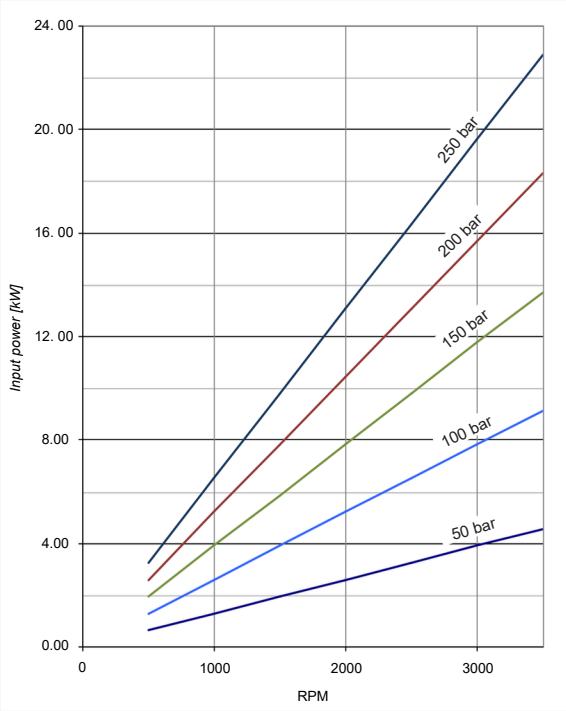

2PE - 13.8

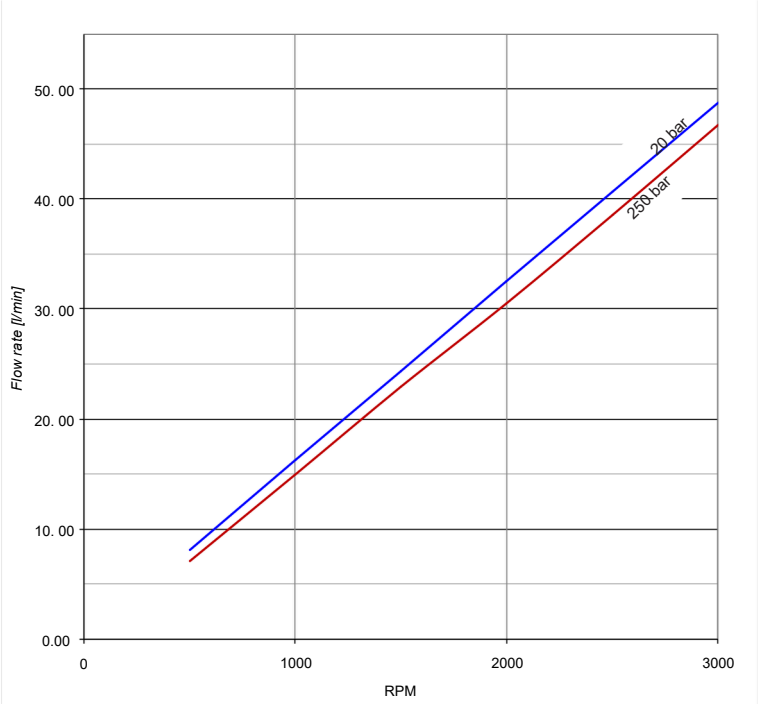

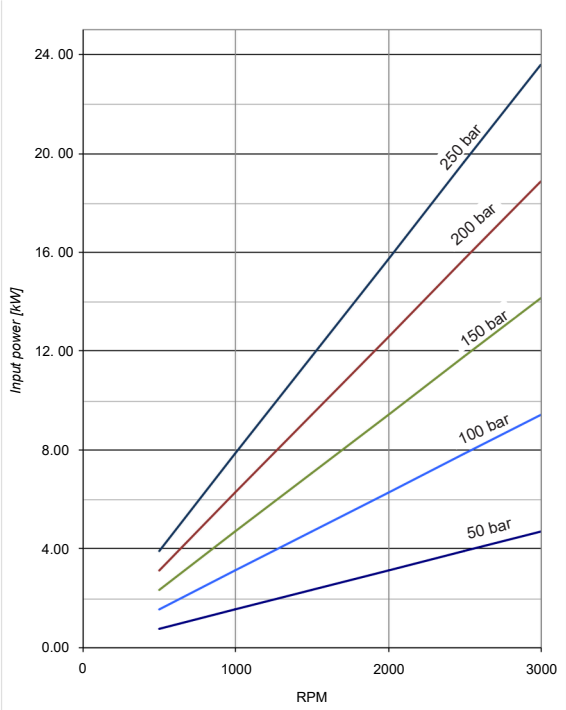

2PE - 16

PERFORMANCE CURVES

Performance curvescarriedoutwithoilviscosityat21cStandoiltemperature at 50°C

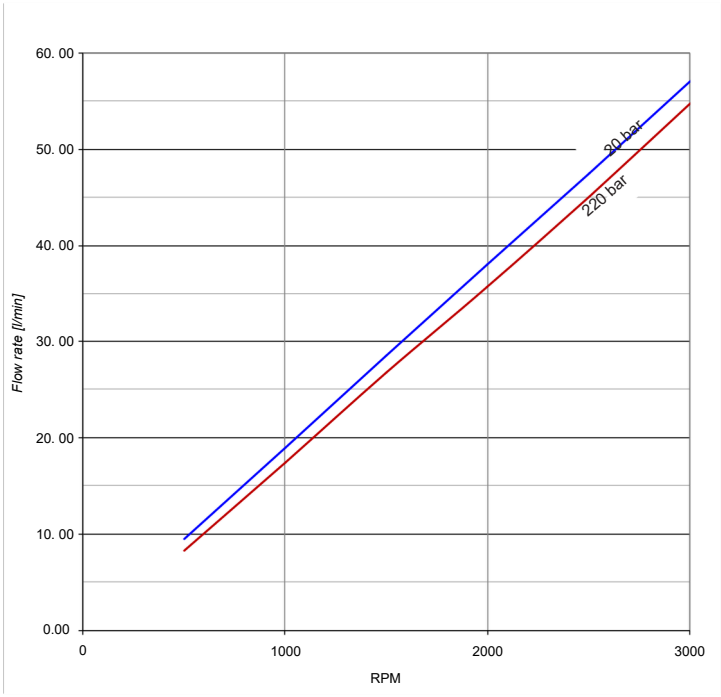

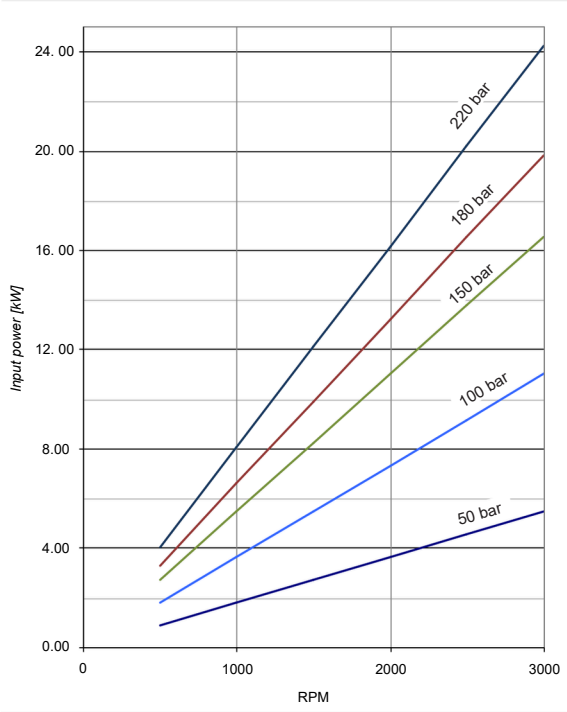

2PE - 19

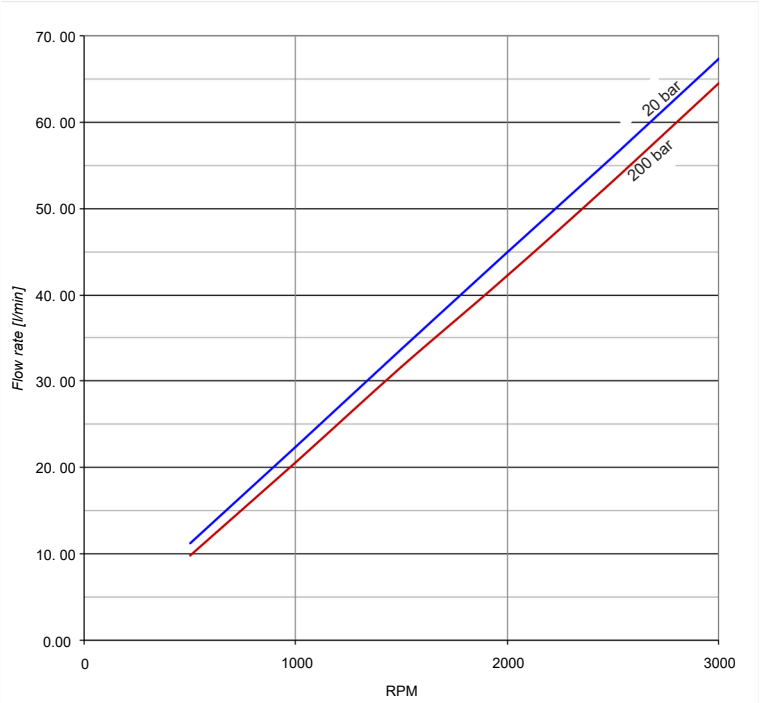

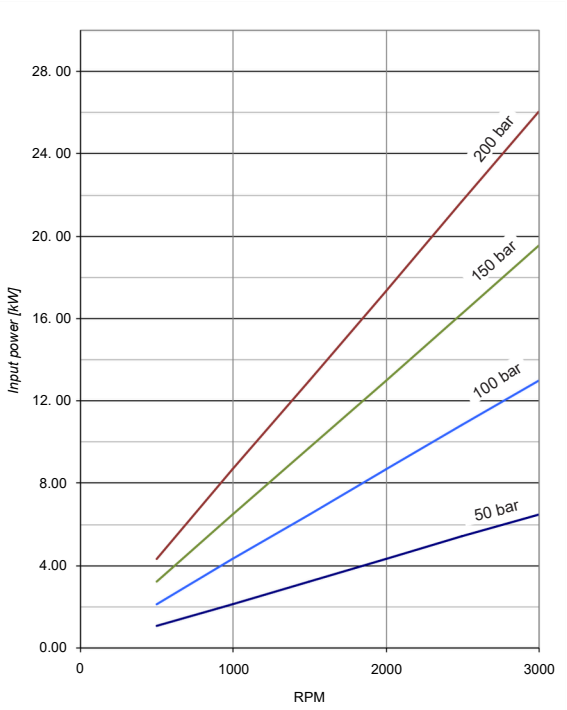

2PE - 22.5

E0.120.0219.02.00IM04

PERFORMANCE CURVES

Performance curvescarriedoutwithoilviscosityat21cStandoiltemperature at 50°C

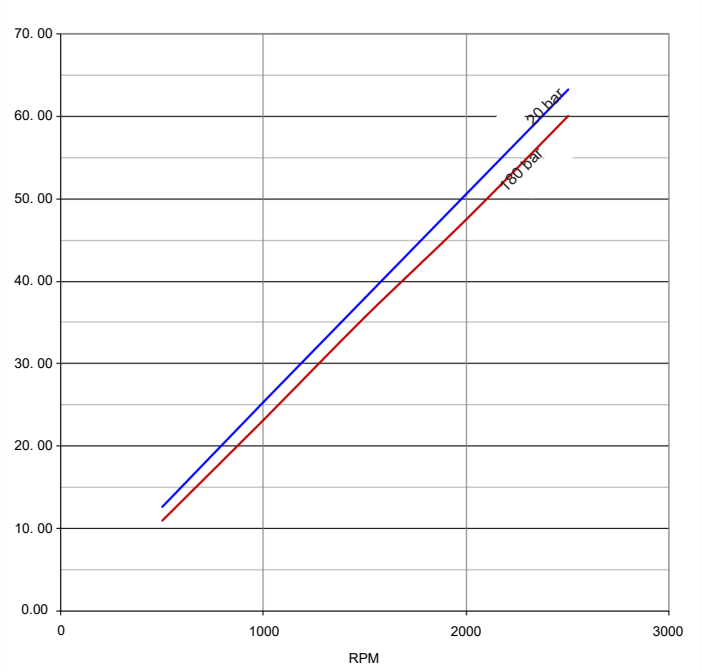

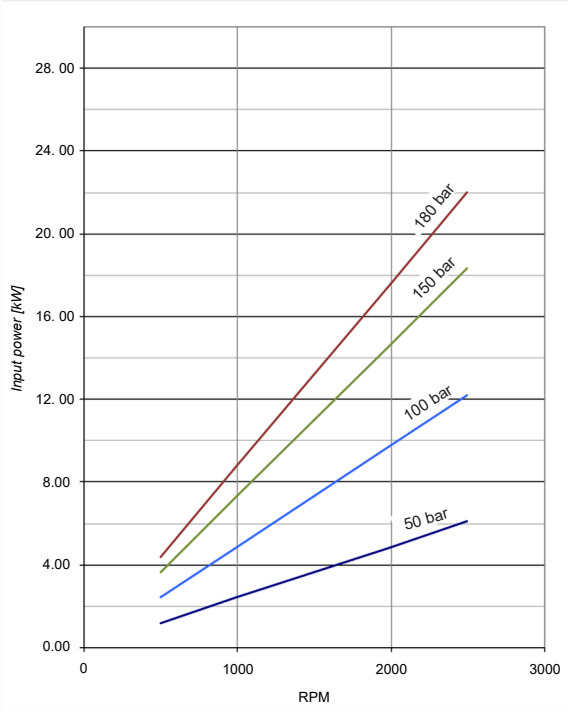

2PE - 26

E0.120.0219.02.00IM04

SINGLE PUMPS

2PE	A	B	-	C	D	E	-	F	-	G	-	H	-	I	-	L	... / ...

Adjustable flow l/min

Setting main relief valve (bar)

DISPLACEMENTS		A CODES
4.6 cm³/rev.	*0.27 cu.in/rev.*	4.5
6.5 cm3/rev.	*0.40 cu.in/rev.*	6.5
8.2 cm3/rev.	*0.50 cu.in/rev.*	8.3
10.6 cm3/rev.	*0.65 cu.in/rev.*	10.5
11.5 cm3/rev.	*0.68 cu.in/rev.*	11.3
12.5 cm3/rev.	*0.77 cu.in/rev.*	12.5
13.8 cm3/rev.	*0.84 cu.in/rev.*	13.8
16.6 cm3/rev.	*1.01 cu.in/rev.*	16
19.4 cm3/rev.	*1.18 cu.in/rev.*	19
22.9 cm3/rev.	*1.37 cu.in/rev.*	22.5
25.8 cm3/rev.	*1.58 cu.in/rev.*	26

ROTATION (page 6)	CODES B
Clockwise	D
Anti-clockwise	S
Reversible	R

PORTS (page 35)	CODES C
Flanged ports european standard	P
Flanged ports german standard	B
Threaded ports GAS (BSPP)	G
Threaded ports SAE (ODT)	R

DRIVE SHAFT (page 36)	CODES D
Tang drive for engine driven	02
Tang drive for electric motors	03
Tang drive	04
Tapered 1:5	25
Tapered 1:5 (only for CB)	26
Tapered 1:8	28
SAE A splined 9T	52
SAE A splined 10T	53
SAE A splined 11T	54
SAE B splined 13T	55
DIN 5480 internal splined **(only for rear pumps- see page 51)**	60
9 teeth DIN 5482 splined	62
5/8" SAE A parallel	82
3/4" SAE A parallel	85

L VALVES IN THE COVER (page 45)	CODES
Lateral Drain	LD
Adjustable main relief valve	VS
Fixed setting main relief valve	VSE
Internal drain	IDV
Priority flow divider with excess flow to 2nd actuator	VP-VP1
Like VP with main relief valve	VPS-VPS1
Priority flow divider with Load sensing with dinamic signal	VPD-VPD1
Load sensing priority valve with dinamic signal with main relief valve	VPDS-VPDS1
Electric unloading valve (12V)	EV1/EV3
Electric unloading valve (24V)	EV2/EV4
Main relief and electric unloading valves (12V)	EVS1/EVS3
Main relief and electric unloading valves (24V)	EVS2/EVS4

I REAR COVER (page 52)	CODE
Pre-arranged for 1.5PE rear	PD1.5

H OUTRIGGER BEARING (page 41)	CODES
European standard	CP
German standard	CB
For engine endothermic motors	CL
For endothermic motors with axial and radial loads	CF
SAE A	CS

G PORTS POSITION	CODE
Lateral ports standard	
Rear ports (page)	1

F SEAL	CODE
Buna standard	
Viton	V

E MOUNTING FLANGES (page 38)	CODES
European standard	P1
German standard Ø80	B1
German standard Ø52	B2-B3
German standard Ø50	B4-B5
SAE A 2 bolts	S2
SAE B 2 bolts	S3
SAE A 2 bolts (with o-ring on the centering collar)	S6
4 bolts for Iveco motor	C1
4 bolts for Perkins motor	K1
German standard with shaft seal Ø52	K3
German standard with shaft seal Ø52	K4
2 threaded holes flange for Perkins motor	MF

Order example: 2PE 19D, ports SAE (R), drive shaft (52), mounting flange (S2) with valve in the cover (VPS 12.5 l/min) andpressureriefvalve setting 180 bar:
2PE19D-R52S2-VPS12.5/180

E0.120.0219.02.00IM04

MULTIPLE PUMPS

2PE	A	/	B	-	C	D	E	-	F	G	-	H	-	I	-	L	M	... / ...

Setting main relief valve (bar)

Adjustable flow l/min

DISPLACEMENTS		A CODES
3.2 cm3/rev.	*0.19 cu.in/rev.*	*3.2**
3.9	*0.24 cu.in/rev.*	*3.9**
4.5 cm3/rev.	*0.27 cu.in/rev.*	4.5
6.5 cm3/rev.	*0.40 cu.in/rev.*	6.5
8.2 cm3/rev.	*0.50 cu.in/rev.*	8.3
10.6 cm3/rev.	*0.65 cu.in/rev.*	10.5
11.5 cm3/rev.	*0.68 cu.in/rev.*	11.3
12.5 cm3/rev.	*0.77 cu.in/rev.*	12.5
13.8 cm3/rev.	*0.84 cu.in/rev.*	13.8
16.6 cm3/rev.	*1.01 cu.in/rev.*	16
19.4 cm3/rev.	*1.18 cu.in/rev.*	19
22.9 cm3/rev.	*1.37 cu.in/rev.*	22.5
25.8 cm3/rev.	*1.58 cu.in/rev.*	26

*Available only as rear pump

ROTATION (page 6)	CODES B
Clockwise	D
Anti-clockwise	S

PORTS (page 35)	CODES C
Flanged ports european standard	P
Flanged ports german standard	B
Threaded ports GAS (BSPP)	G
Threaded ports SAE (ODT)	R

DRIVE SHAFT (page 36)	CODES D
Tang drive for engine driven	02
Tang drive for electric motors	03
Tang drive	04
Tapered 1:5	25
Tapered 1:5 (only for CB)	26
Tapered 1:8	28
SAE A splined 9T	52
SAE A splined 10T	53
SAE A splined 11T	54
SAE B splined 13T	55
9 teeth DIN 5482 splined	62
5/8" SAE A parallel	82
3/4" SAE A parallel	85

*UA: this type of multiple pump is a Salami standard multiple pump which has only one inlet port opened, all the other inlet port are closed.
In case of common suction, the code 1 - 2 or 3, correspond to the body where inlet is located.

M VALVES IN THE COVER (page 45)	CODES
Lateral Drain	LD
Adjustable main relief valve	VS
Fixed setting main relief valve	VSE
Internal drain	IDV
Unloading valve	VSQ
Priority flow divider with excess flow to 2nd actuator	VP-VP1
Like VP with main relief valve	VPS-VPS1
Priority flow divider with Load sensing with dinamic signal	VPD-VPD1
Load sensing priority valve with dinamic signal with main relief valve	VPDS-VPDS1
Electric unloading valve (12V)	EV1/EV3
Electric unloading valve (24V)	EV2/EV4
Main relief and electric unloading valves (12V)	EVS1/EVS3
Main relief and electric unloading valves (24V)	EVS2/EVS4

L REAR COVER (page 52)	CODE
Pre-arranged for 1.5PE rear	PD1.5

I OUTRIGGER BEARING (page 41)	CODES
European standard	CP
German standard	CB
For engine endothermic motors	CL
For endothermic motors with axial and radial loads	CF
SAE A	CS

H PORTS POSITION	CODE
Lateral ports standard	
Rear ports (page)	1

G SUCTION PORTS	CODES
Common suction	UA*
Separeted stages	AS

F SEAL	CODE
Buna standard	
Viton	V

E MOUNTING FLANGES (page 38)	CODES	MOUNTING FLANGES	CODES
European standard	P1	SAE A 2 bolts (with o-ring on the centering collar)	S6
German standard Ø80	B1	4 bolts for Iveco engines	C1
German standard Ø52	B2-B3	4 bolts for Perkins motor	K1
German standard Ø50	B4-B5	German standard with shaft seal Ø52	K3
SAE A 2 bolts	S2	German standard with shaft seal Ø52	K4
SAE B 2 bolts	S3	2 threaded holes flange for Perkins motor	MF

E0.120.0219.02.00IM04

SALAMI S.P.A.
Via EmiliaOvest 1006
41123 Modena (Italy)
Ph. +39 059 387 411
F. +39 059 387 639
sales@salami.it

SALAMI FRANCE
22,rue Louis Saillant
69120 Valux en Velin
Lyon
Ph. +33-04-78809941
F. +33-04-78803669
e.pasian@salami.fr

SALAMI ESPAÑA
Poligono Industrial Armenteres C/Primer de Maig, 18, Nave 4 08980 San Feliu de Llobregat Barcelona Ph. +34-93-6665451 F. +34-93-6667826 info@salamispain.com

SALAMI HYDRAULICS N.A INC
4630 Crossroads Park Drive
Liverpool
NY 13088 - USA
Ph. +1-315-295-2363
F. +1-315-295-2364
info@salamihydraulics.com

3PE

Aluminiumgear pumps

Technical Catalogue

E0.130.0219.02.00IM04

salami®

GEAR PUMPS

SALAMI gear pumps are available with displacements from 1.4 cm3/rev to 99 cm3/rev *(from 0.09 cu.in/rev to 6.03 cu.in/rev).*
Multiple pumps can always be relized combining stages taken from different or same series.
Several options of shafts, flanges and ports as for European, German and American standards are available for all the pumps.
SALAMI gear pumps offer:
•High volumetric efficiency thanks to an innovative design and an accurate control of machining tolerances.
•Axial compensation achieved by the use of floating bushes that allow high volumetric efficiency throughout the working pressure range.
•DU bearings to ensure high pressure capability.
•12 teeth integral gear and shaft.
•Aluminium body.
•Cast iron flange and cover.
•Double shaft seals.
•Nitrile seals as standard and Viton seals in high temperature applications.
•All pumps are hydraulically tested after assembly to ensure the highest standard performance.
•Gear pumps are ideal for mobile equipment including: snow plows, light duty equipment, farm vehicles, town trucks, cherry pickers, lift gates, utility vehicles, aerial devices, hoists, spreaders, fan drive.
•Also available Bidirectional rotation.

WORKING CONDITIONS

- Pump inlet pressure (absolute pressure)	0.8 to 1.5 bar *(11.6 to 21.7 psi)* 12 mm2 / sec
- Minimum operating fluid viscosity	800 mm2 / sec
- Max starting viscosity	17 - 65 mm2 / sec
- Suggested fluid viscosity range	-20 to 80 °C
- Fluid operating temperature range	-15 to 110°C
- Fluid operating temperature range with FPM seals (Viton)	-30 to 110°C
- Fluid operating temperature range with HNBR seals*	Mineral oil according to DIN 51524.
- Hydraulic fluid *Available on request	Other hydraulic fluids on request.

DEFINITION OF PRESSURES

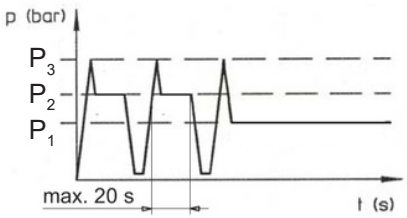

P3 ≡ Peak pressure
P2 ≡ Intermittent operating pressure (1/3 of working time)
P1 ≡ Continuous operating pressure

P

P

E0.100.0821.02.00IM03

DRIVE SHAFTS

Radial and axial loads on the shafts must be avoided since they reduce the life of the unit.
In order to avoid misalignment during the assembly with the primary engine, a connection with “Oldham” coupling (or coupling having convex toothed hub) is recommended.

ROTATION

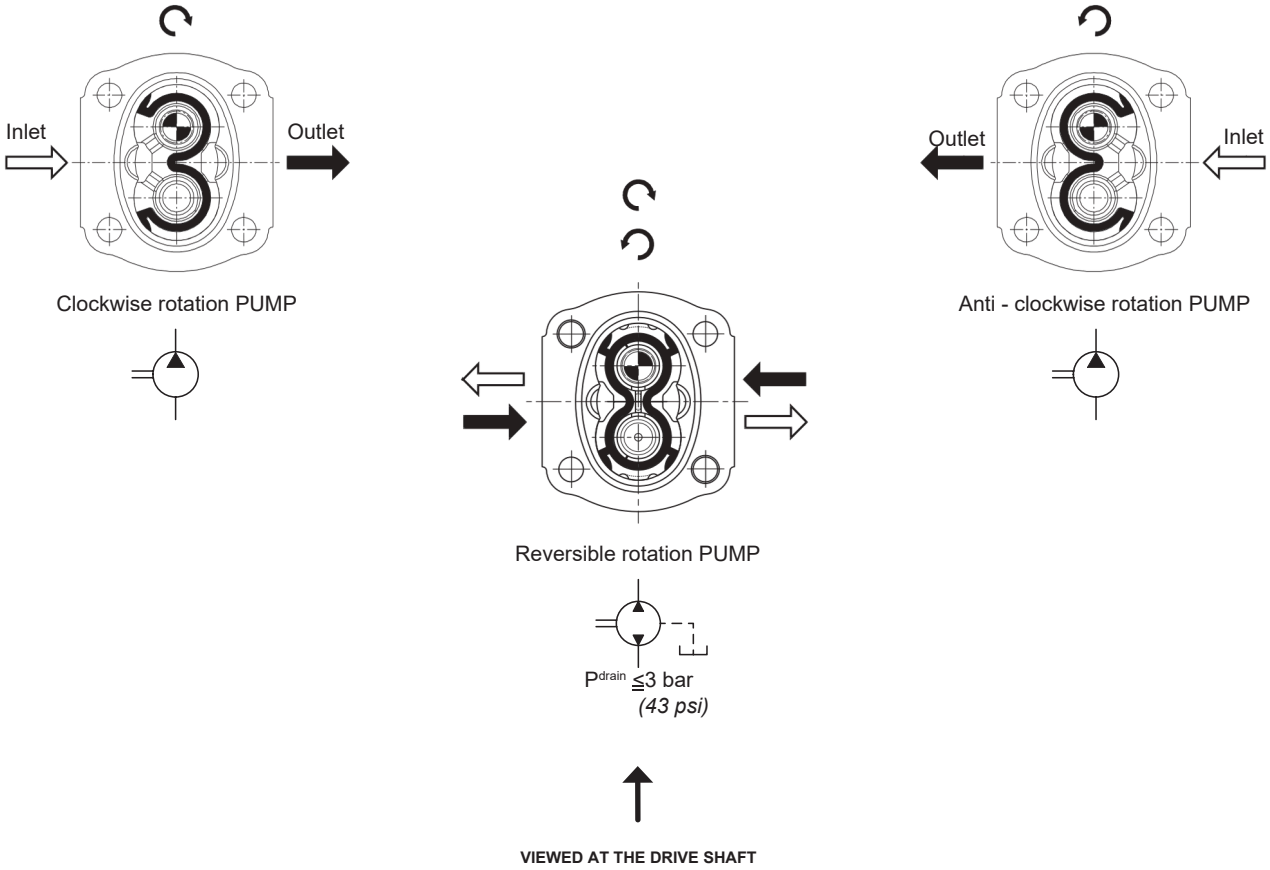

HYDRAULIC PIPE LINE

To ensure favorable suction conditions it is important to keep pressure drop in suction pipe line to a minimum value (see TECHNICAL DATA).
To calculate hydraulic pipe line size, the designer can use; as an approximate guide, the following fluid speed figures:

From 1 to 2 m/sec on suction pipe line
From 6 to 10 m/sec on pressure pipe line

From *3.28* to *6.36 ft/sec* on suction pipe line
From *19.7* to *32.8 ft/sec*on pressure pipe line

The lowest fluid speed values in pipe lines is recommended when the operating temperature range is high and/or for continuos duty.
The highest value is recommended when the temperature difference is low and/or for intermittent duty.
When tandem pumps are supplied by 2 different reservoirs with 2 different fluids it is necessary to specify “AS” version.

E0.100.0821.02.00IM03

FILTRATION INDEX RECOMMENDED

Working pressure	>200 bar/2900 psi	<200 bar/2900 psi
Contamination class NAS 1638	9	10
Contamination class ISO 4406	19/18/15	20/19/16
Achieved with filter βx=75	15 µm	25 µm

COMMON FORMULAS FOR PUMPS

C = Input torque $= \dfrac{q \cdot \Delta p}{62.8 \cdot \eta_m}$ (Nm)

P = Input power $= \dfrac{q \cdot n \cdot \Delta p \; 10^{-3}}{600 \; \eta_m}$ (kW)

Q = Outlet flow $= \dfrac{q \cdot n \cdot \eta_v}{1000}$ (l/min)

LEGENDA

Δp = Working pressure (bar)

q = Displacement (cm^3/rev)

n = Speed (min^{-1})

η_m = Mechanical eff. (0.92)

η_v = Volumetric eff. (0.95)

IDENTIFICATION LABEL

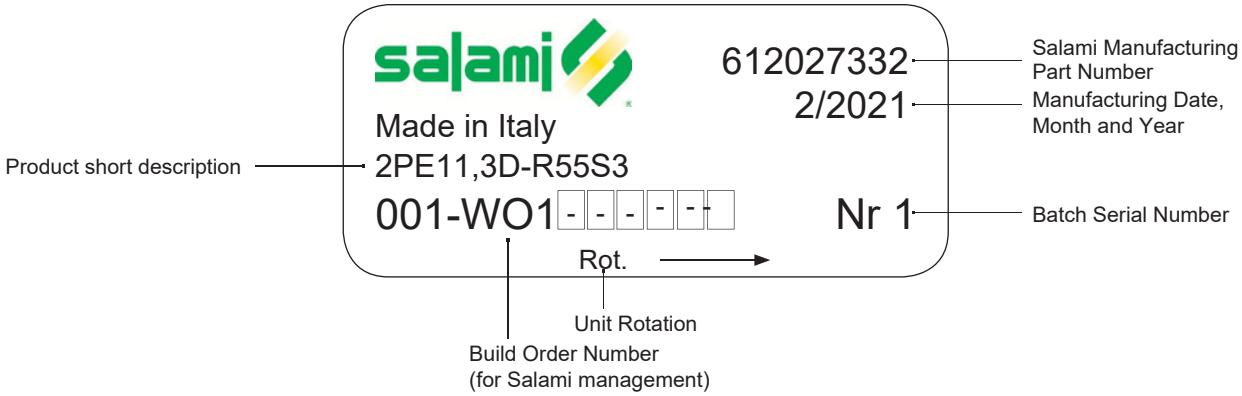

TECHNICAL DATA

	Displacement		Continuous pressure P1		Intermittent pressure P2		Peak pressure P3		Max. speed	Min. speed
GROUP 1.5 - E SERIES	cm3/rev	*cu.in/rev*	bar	*psi*	bar	*psi*	bar	*psi*	rpm	
1.5PE - 1.4	1.4	*0.09*	250	*3625*	270	*3915*	290	*4205*	5000	700
1.5PE - 2.1	2.1	*0.13*	250	*3625*	270	*3915*	290	*4205*	5000	700
1.5PE - 2.8	2.8	*0.17*	250	*3625*	270	*3915*	290	*4205*	4500	700
1.5PE - 3.5	3.5	*0.21*	250	*3625*	270	*3915*	290	*4205*	4500	700
1.5PE - 4.1	4.1	*0.25*	250	*3625*	270	*3915*	290	*4205*	4000	700
1.5PE - 5.2	5.2	*0.32*	230	*3335*	250	*3625*	270	*3915*	4000	700
1.5PE - 6.2	6.2	*0.38*	230	*3335*	250	*3625*	270	*3915*	3600	600
1.5PE - 7.6	7.6	*0.46*	200	*2900*	220	*3190*	250	*3625*	3300	600
1.5PE - 9.3	9.3	*0.57*	180	*2610*	200	*2900*	240	*3480*	3000	600
1.5PE - 11	11	*0.67*	170	*2465*	190	*2755*	220	*3190*	3000	600

GROUP 2 - E SERIES	cm3/rev	*cu.in/rev*	bar	*psi*	bar	*psi*	bar	*psi*	rpm	
2PE - 3.2*	3.2	*0.19*	250	*3625*	280	*4060*	300	*4350*	4000	600
2PE - 3.9*	3.9	*0.24*	250	*3625*	280	*4060*	300	*4350*	4000	600
2PE - 4.5	4.6	*0.27*	250	*3625*	280	*4060*	300	*4350*	4000	600
2PE - 6.5	6.5	*0.4*	250	*3625*	280	*4060*	300	*4350*	4000	600
2PE - 8.3	8.2	*0.5*	250	*3625*	280	*4060*	300	*4350*	3500	500
2PE - 10.5	10.6	*0.65*	250	*3625*	280	*4060*	300	*4350*	3500	500
2PE - 11.3	11.5	*0.68*	250	*3625*	280	*4060*	300	*4350*	3500	500
2PE - 12.5	12.7	*0.77*	250	*3625*	280	*4060*	300	*4350*	3500	500
2PE - 13.8	13.8	*0.84*	250	*3625*	280	*4060*	300	*4350*	3500	500
2PE - 16	16.6	*1.01*	250	*3625*	280	*4060*	300	*4350*	3000	400
2PE - 19	19.4	*1.15*	220	*3190*	240	*3480*	260	*3750*	3000	400
2PE - 22.5	22.9	*1.37*	200	*2900*	220	*3190*	240	*3480*	2750	400
2PE - 26	26.6	*1.62*	180	*2610*	200	*2900*	220	*3190*	2500	400

*Available only as rear pump

GROUP 2.5 - B SERIES	cm3/rev	*cu.in/rev*	bar	*psi*	bar	*psi*	bar	*psi*	rpm	
2.5PB - 5.5*	5.97	*0.36*	250	*3625*	280	*4060*	300	*4350*	3000	600
2.5PB - 8.3*	8.29	*0.50*	250	*3625*	280	*4060*	300	*4350*	3000	600
2.5PB - 11.5*	11.76	*0.72*	250	*3625*	280	*4060*	300	*4350*	3000	600
2.5PB - 13.8*	14.07	*0.86*	250	*3625*	280	*4060*	300	*4350*	3000	600
2.5PB - 16	16	*0.97*	250	*3625*	280	*4060*	300	*4350*	3000	600
2.5PB - 19	19.3	*1.17*	250	*3625*	280	*4060*	300	*4350*	3000	600
2.5PB - 22	22.2	*1.35*	250	*3625*	280	*4060*	300	*4350*	3000	500
2.5PB - 25	25.2	*1.53*	250	*3625*	280	*4060*	300	*4350*	3000	500
2.5PB - 28	27.6	*1.68*	250	*3625*	280	*4060*	300	*4350*	3000	500
2.5PB - 32	32.4	*1.97*	230	*3335*	250	*3625*	260	*3750*	3000	500
2.5PB - 38	38.1	*2.32*	200	*2900*	220	*3190*	240	*3480*	2750	400
2.5PB - 44	44.2	*2.69*	170	*2465*	190	*2755*	210	*3040*	2500	400

*Available only as rear pump. Displacements **11.5-13.8** are available as single pump only with drive shaft “55”.

E0.100.0821.02.00IM03

TECHNICAL DATA

	Displacement		Continuous pressure P1		Intermittent pressure P2		Peak pressure P3		Max. speed	Min. speed
GROUP 3 - E SERIES	cm3/rev	*cu.in/rev*	bar	*psi*	bar	*psi*	bar	*psi*	rpm	
3PE - 21	20.6	*1.26*	250	*3625*	280	*4060*	300	*4350*	3000	600
3PE - 27	27	*1.65*	250	*3625*	280	*4060*	300	*4350*	3000	600
3PE - 33	33.5	*2.04*	250	*3625*	280	*4060*	300	*4350*	3000	600
3PE - 38	38.7	*2.36*	250	*3625*	280	*4060*	300	*4350*	2750	500
3PE - 46	46.9	*2.86*	250	*3625*	270	*3915*	280	*4060*	2750	500
3PE - 55	54.1	*3.3*	220	*3190*	240	*3480*	250	*3625*	2500	400
3PE - 65	63.1	*3.85*	200	*2900*	220	*3190*	240	*3480*	2500	400
3PE - 75	73.4	*4.48*	180	*2610*	200	*2900*	220	*3190*	2500	400

GROUP 3.5 - C SERIES	cm3/rev	*cu.in/rev*	bar	*psi*	bar	*psi*	bar	*psi*	rpm	
3.5PC - 55	54.8	*3.34*	250	*3625*	280	*4060*	300	*4350*	2750	400
3.5PC - 64	63.2	*3.85*	250	*3625*	280	*4060*	300	*4350*	2750	350
3.5PC - 75	74.7	*4.55*	230	*3335*	250	*3625*	280	*4060*	2500	300
3.5PC - 87	88	*5.36*	210	*3040*	230	*3330*	260	*3750*	2250	300
3.5PC - 98*	99	*6.03*	200	*2900*	220	*3190*	250	*3625*	2000	300

*Displacement 98 are special release, please contact sales department.

Max Speed must be lowered by 10% for system working continuosly at p1 pressure.
Max pressure must be lowered by10% for bi-directional pump.

ROTATION CHANGING INSTRUCTIONS FOR UNITS

Keep the working surface cleaned as well as the exterior of the pump before starting and avoid inner contamination of the pump. The pump shown below is a clockwise rotating pump.
To achieve anti - clockwise rotation, please read the following instructions carefully.

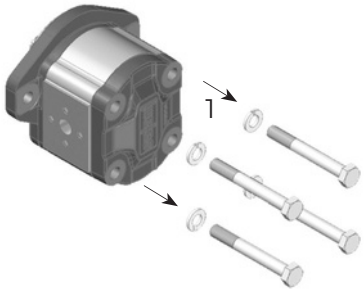

1 - Loosen and fully unscrew the bolts. **2** - Lay the pump on the working area in order to have the mounting flange turned upside. **3** - Coat the shaft end with grease to avoid damaging the shaft seal. **4** - Remove the flange and lay it on the working area; verify that the seal is correctly located in the body seat.

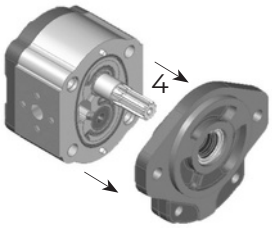

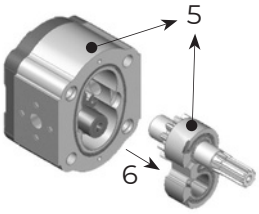

5 - Mark the position of the bushing and eventually of the thrust plate, as well, with reference to the body.
6 - Remove the bushing, thrust plate and the driving gear taking care to avoid driven gear axial shifts.

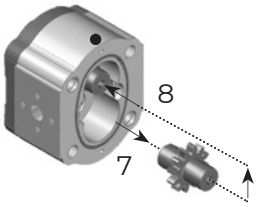

7 - Draw out the driven gear from its housing, taking care to avoid rear cover axial shifts.
8 - Re-locate the driven gear in the position previously occupied by the driving gear.

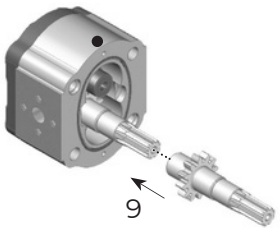

9 - Re-locate the driving gear in the position previously occupied by the driven gear.

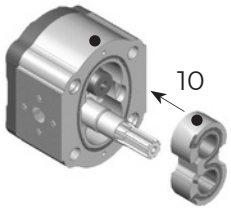

10 - Replace the bushing and thrust plate taking care that:
- marks are located as on the picture
- surface containing the seal is visible
- seal and its protection are correctly located.

11 - Clean the body and mounting flange facing surfaces.
12 - Verify that the two plugs are located in the body.
13 - Refit the mounting flange, turned 180° from its original position.
14 - Replace the bolts and tighten clockwise evenly to an appropriate torque.
15 - Check that the shaft rotates freely.
16 - Mark on the flange the new direction of rotation.

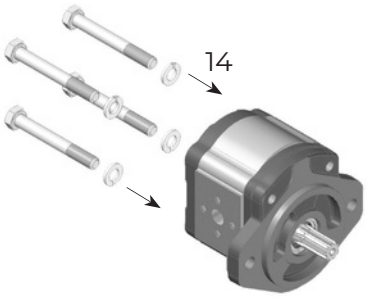

E0.100.0821.02.00IM03

INDEX

Final revised edition - February 2019

SHAFTS AND FLANGES COMBINATION

3PE	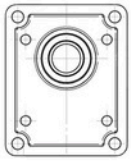 CODE **P2** - European stand.	 CODE **B6** - German stand.	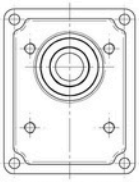 CODE **P3** - European stand. for 3,5PC	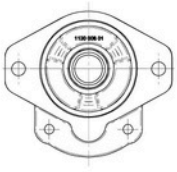 CODE **S3** - SAE B
 CODE **35** - Tapered 1:5		35B6		
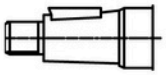 CODE **38** - Tapered 1:8	38P2			
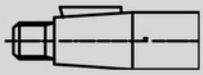 CODE **48** - Tapered 1:8 for 3,5PC			48P3	
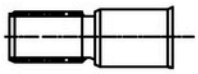 CODE **55** - SAE B 13T				55S3
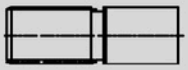 CODE **56** - SAE BB 15T				56S3
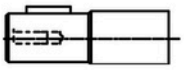 CODE **87** - SAE B parallel				87S3
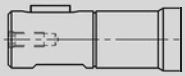 CODE **88** - SAE BB parallel				88S3
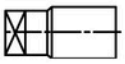 CODE **05** - Tang drive for electric motors		05B6		

E0.130.0219.02.00IM04

Displacements up to 4.48 cu.in./rev
Pressure up to 4350 psi

GEAR PUMPS

Displacements up to 73.4 cm3/rev
Pressure up to 300 bar

ASSEMBLING DIMENSIONS AND WORKING CONDITIONS

Type			21	27	33	38	46	55	65	75
Displacement		cm3/rev	20.6	27	33.5	38.7	46.9	54.1	63.1	73.4
		cu.in./rev	1.26	1.65	2.04	2.36	2.86	3.3	3.85	4.48
Dimension A		mm	74	79	84	88	104	110	117	124
		in	2.91	3.11	3.31	3.46	4.09	4.33	4.61	4.88
Dimension C		mm	37	39.5	42	44	52	55	58.5	62
		in	1.46	1.56	1.65	1.73	2.05	2.17	2.30	2.44
Continuous pressure	P1	bar	250	250	250	250	250	220	200	180
		psi	3625	3625	3625	3625	3625	3190	2900	2610
Intermittent pressure	P2	bar	280	280	280	280	270	240	220	200
		psi	4060	4060	4060	4060	3915	3480	3140	2900
Peak pressure	P3	bar	300	300	300	300	280	250	240	220
		psi	4350	4350	4350	4350	4060	3625	3480	3140
Max speed		rpm	3000	3000	3000	2750	2750	2500	2500	2500
Min speed		rpm	600	600	600	500	500	400	400	400
Weight		kg	8.80	9.10	9.40	9.60	10.40	10.80	11.00	11.50
		lbs	19.40	20.06	20.86	21.16	22.93	23.81	24.25	25.35

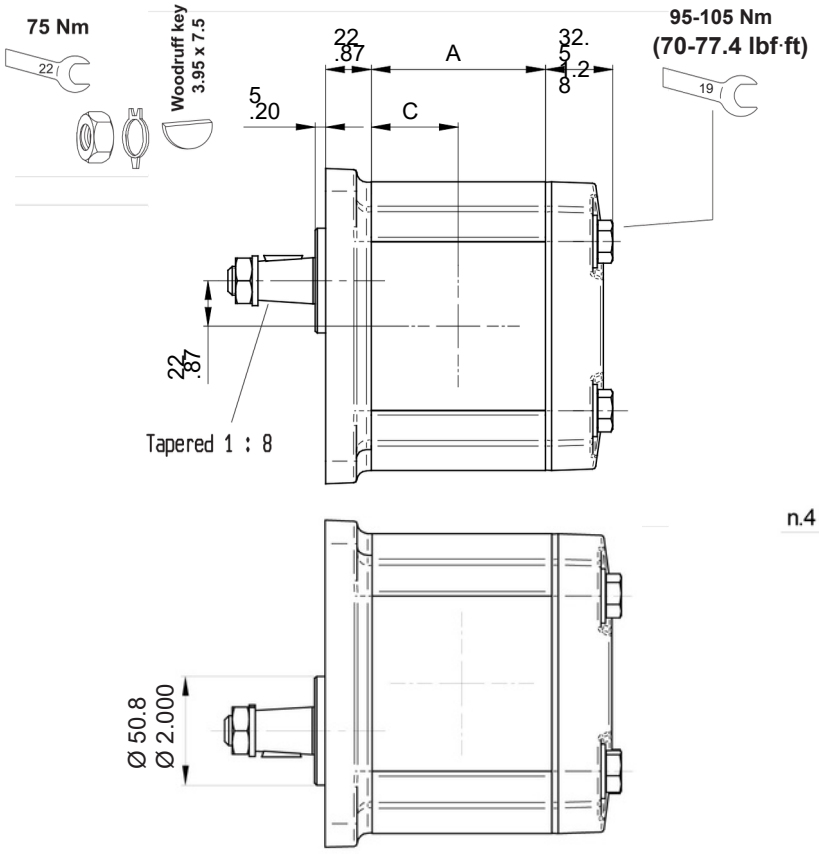

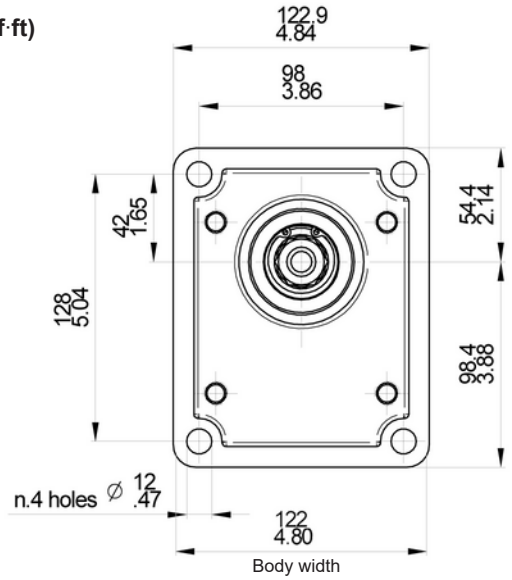

Showed release with
flange P2 and shaft 38

E0.130.0219.02.00IM04

Displacements up to 4.48 cu.in./rev
Pressure up to 4350 psi

GEAR PUMPS

Displacements up to 73.4 cm3/rev
Pressure up to 300 bar

ASSEMBLING DIMENSIONS

Type		46	55	65	75
Displacement	cm3/rev cu.in./rev	46.9 *2.86*	54.1 *3.3*	63.1 *3.85*	73.4 *4.48*
Dimension A	mm in	104 *4.09*	110 *4.33*	117 *4.61*	124 *4.88*
Dimension C	mm in	52 *2.05*	55 *2.17*	58.5 *2.30*	62 *2.44*
Weight	kg lbs	10.1 *22.3*	10.5 *23*	10.8 *23.8*	11.2 *24.6*

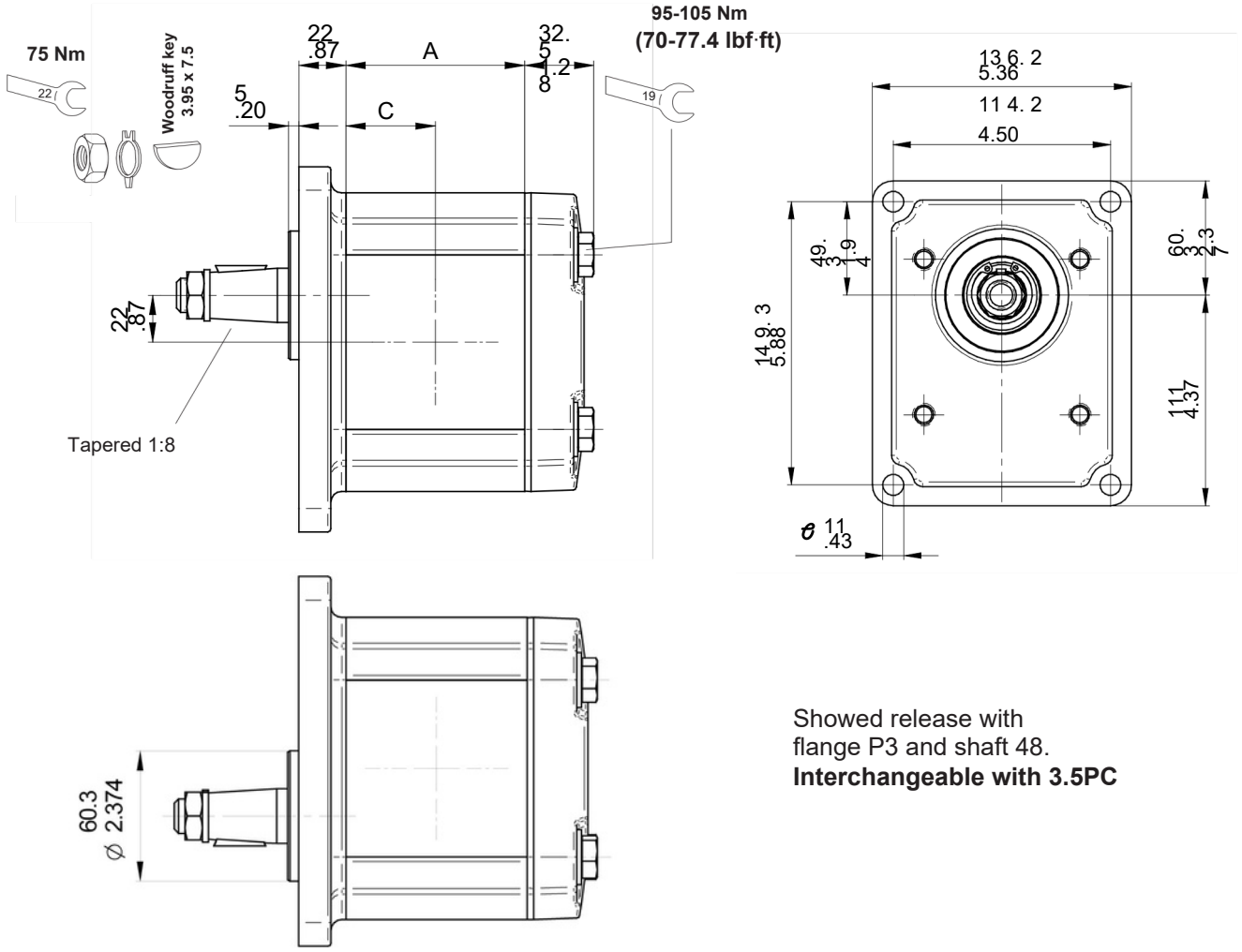

Showed release with
flange P3 and shaft 48.
Interchangeable with 3.5PC

E0.130.0219.02.00IM04

FLANGED AND THREADED PORTS

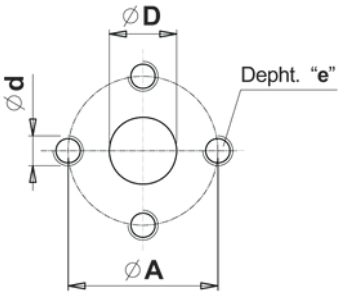

code P

Flanged ports
european standard

UNI-DIRECTIONAL PUMPS

TYPE	INLET				OUTLET			
	Ø D	Ø A	d	e	Ø D	Ø A	d	e
From 21 to 55	27 *(1.06")*	51 *(2.01")*	M10	16 *(0.63")*	16 *(0.63")*	40 *(1.57")*	M8	16 *(0.63")*
From 65 to 75	33 *(1.3")*	62 *(2.44")*	M12		21 *(0.83")*	51 *(2.01")*	M10	

BI-DIRECTIONAL PUMPS Special version available on request.

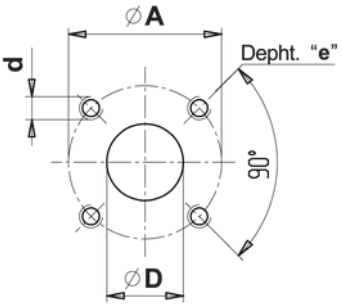

code B

Flanged ports
german standard

UNI-DIRECTIONAL PUMPS

TYPE	INLET				OUTLET			
	Ø D	Ø A	d	e	Ø D	Ø A	d	e
21	22 *(0.86")*	55 *(2.17")*	M8	13 *(0.51")*	19 *(0.75")*	55 *(2.17")*	M8	13 *(0.51")*
From 27 to 75	27 *(1.06")*							

BI-DIRECTIONAL PUMPS Special version available on request.

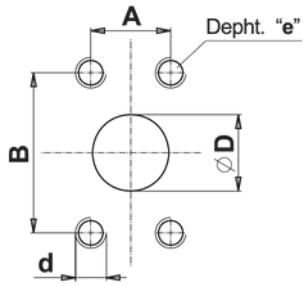

code W

Flanged ports
SAE J518
METRIC THREAD

UNI-DIRECTIONAL PUMPS

TYPE	INLET					OUTLET				
	ØD	B	A	d	e	ØD	B	A	d	e
From 21 to 38	26 *(1.02")*	52.4 *(2.06")*	26.2 *(1.03")*	M10	18 *(0.71")*	19 *(0.75")*	47.6 *(1.87")*	22.2 *(0.87")*	M10	18 *(0.71")*
From 46 to 75	32 *(1.26")*	58.7 *(2.31")*	30.2 *(1.19")*			26 *(1.02")*	52.4 *(2.06")*	26.2 *(1.03")*		

BI-DIRECTIONAL PUMPS Special version available on request.

E0.130.0219.02.00IM04

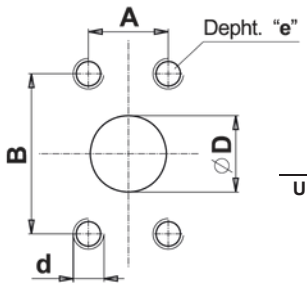

code S

Flanged ports
SAE J518
AMERICAN STANDARD
THREAD

UNI-DIRECTIONAL PUMPS

TYPE	INLET					OUTLET				
	ØD	B	A	d	e	ØD	B	A	d	e
From 21 to 38	26 *(1.02")*	52.4 *(2.06")*	26.2 *(1.03")*	3/8 16 UNC	18 *(0.71")*	19 *(0.75")*	47.6 *(1.87")*	22.2 (0.87")	3/8 16 UNC	18 *(0.71")*
From 46 to 75	32 *(1.26")*	58.7 (2.31")	30.2 *(1.19")*	7/16 14 UNC		26 *(1.02")*	52.4 *(2.06")*	26.2 *(1.03")*		

BI-DIRECTIONAL PUMPS Special version available on request.

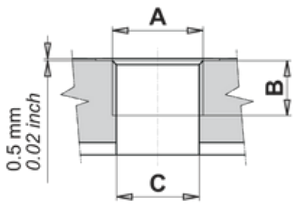

code G

Threaded ports
GAS (BSPP)

UNI-DIRECTIONAL PUMPS

TYPE	INLET			OUTLET		
	A	B	C	A	B	C
From 21 to 38	G1	22 *(0.86")*	27 *(1.06")*	G1	22 *(0.86")*	27 *(1.06")*
From 46 to 75	G1 1/4	24 *(0.94")*	32.5 *(1.28")*			

BI-DIRECTIONAL PUMPS Special version available on request.

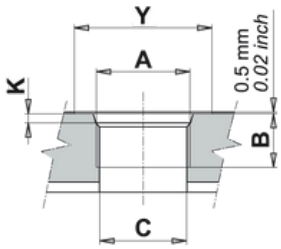

code R

Threaded ports
SAE (ODT)

UNI-DIRECTIONAL PUMPS

TYPE	INLET					OUTLET				
	A	B	C	Y	K	A	B	C	Y	K
From 21 to 38	1-5/16-12 UN (SAE 16)	19 *(0.75")*	25 *(0.98")*	49 *(1.93")*	3.3 *(0.12")*	1-1/16-12 UN (SAE 12)	19 *(0.75")*	21 *(0.83")*	41 *(1.16")*	3.3 *(0.13")*
From 46 to 75	1-5/8-12 UN (SAE 20)		27 *(1.06")*	58 *(2.28")*		1-5/16-12 UN (SAE 16)		25 *(0.98")*	49 *(1.93")*	

BI-DIRECTIONAL PUMPS Special version available on request.

E0.130.0219.02.00IM04

DRIVE SHAFTS

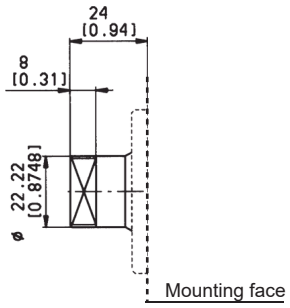

code 05 Max torque 180 Nm (1590 lbf in)

Tangdrivefor electric motor

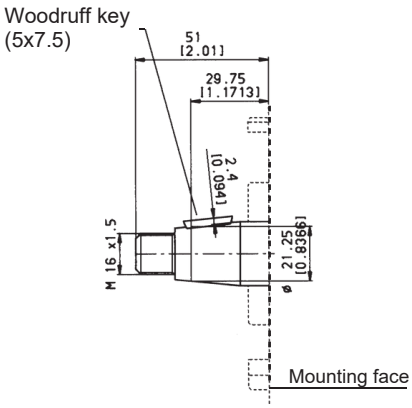

code 35 Max torque 260 Nm (2300 lbf in)

Europeantapered 1:5

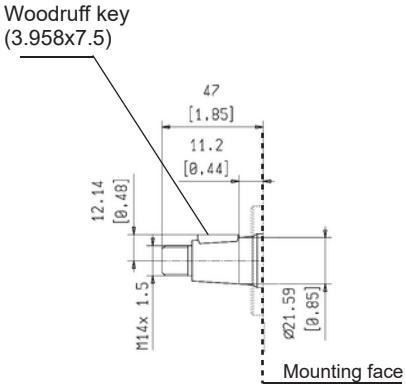

code 38 Max torque 250 Nm (2213 lbf in)

Europeantapered 1:8

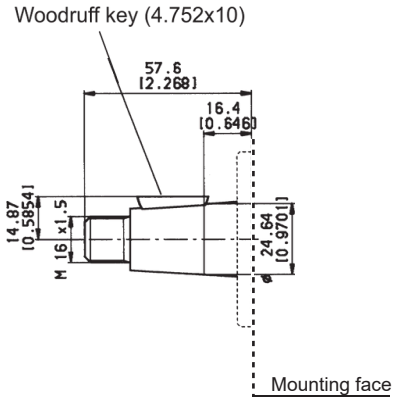

code 48 Max torque 350 Nm (3100 lbf in)

Europeantapered 1:8 for 3.5PC

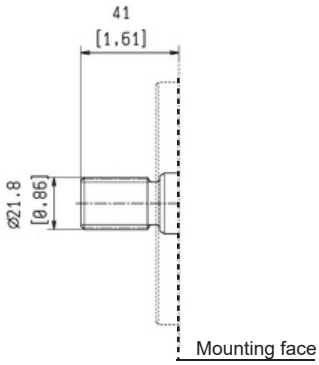

code 55 Max torque 330 Nm (2921 lbf in)

SAEB13T-16/32DP Ansi B92 1a 1976

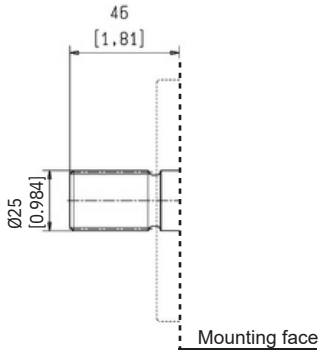

code 56 Max torque 480 Nm (4250 lbf in)

SAEBB15T-16/32DP Ansi B92 1a 1976

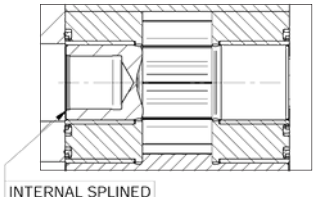

code 65 Max torque 280 Nm (2478 lbf in)

DIN5480 internal splined (only for rear pumps)

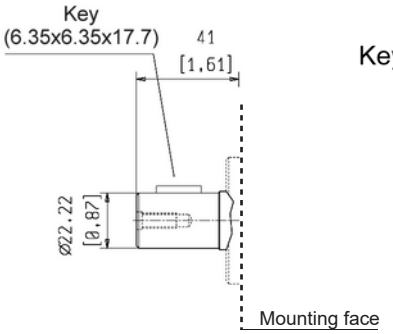

code 87 Max torque 220 Nm (1950 lbf in)

SAE B Parallel

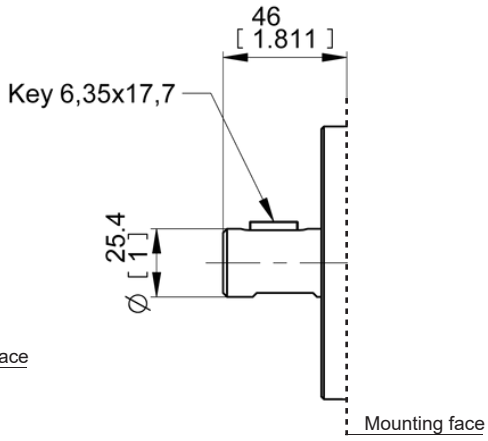

code 88 Max torque 320 Nm (2830 lbf in)

SAE BB Parallel

E0.130.0219.02.00IM04

MOUNTING FLANGES

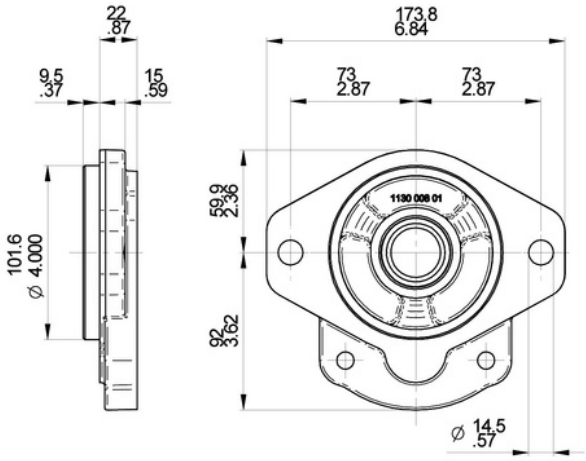

S3	SAE B 2 Bolts
With shaft code 55-56-87-88	

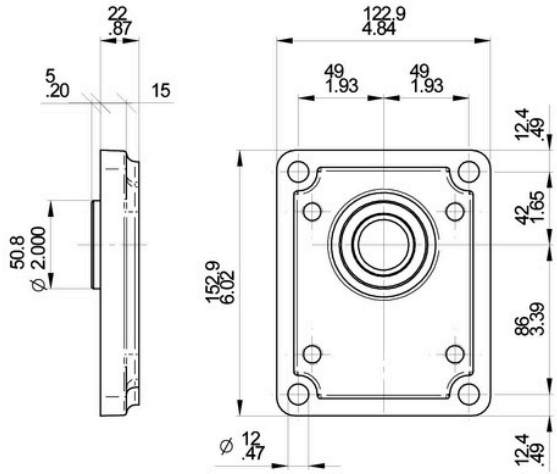

P2	European standard
With shaft code 38	

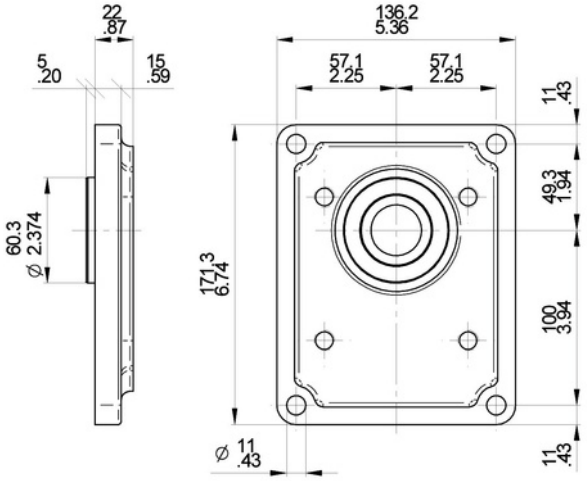

P3	European standard for 3.5PC
With shaft code 48	

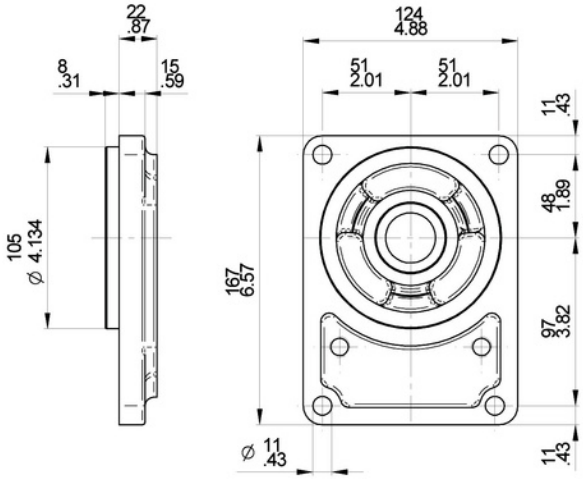

B6	German standard
With shaft code 05-35	

E0.130.0219.02.00IM04

OUTRIGGER BEARING

The following diagrams show radial load capability of the bearing.
Calculation according to ISO 281 at 10 cSt.

TYPE	H
27	79 (3.11")
33	84 (3.31")
38	88 (3.46")
46	104 (4.09")
55	110 (4.33")
65	117 (4.61")

L=Distance between mounting flange and radial force point of application.

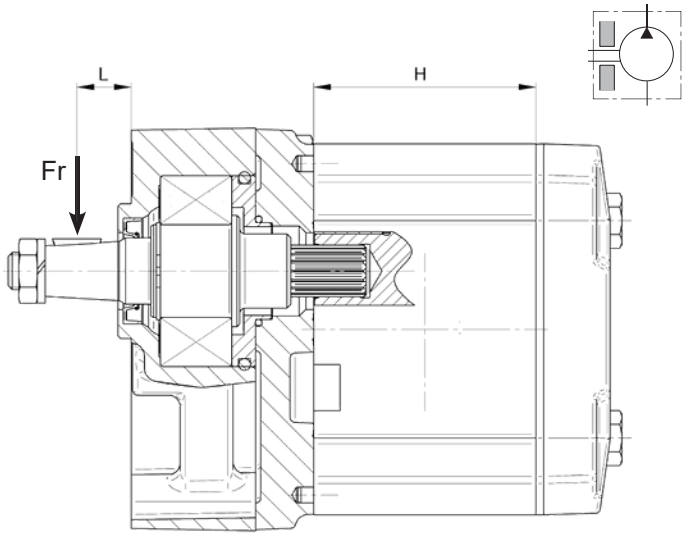

Example:
Fr = 3000 N
L = 35
Speed = 2500 rpm
→ Expected life: 1000 hrs

For Code CP

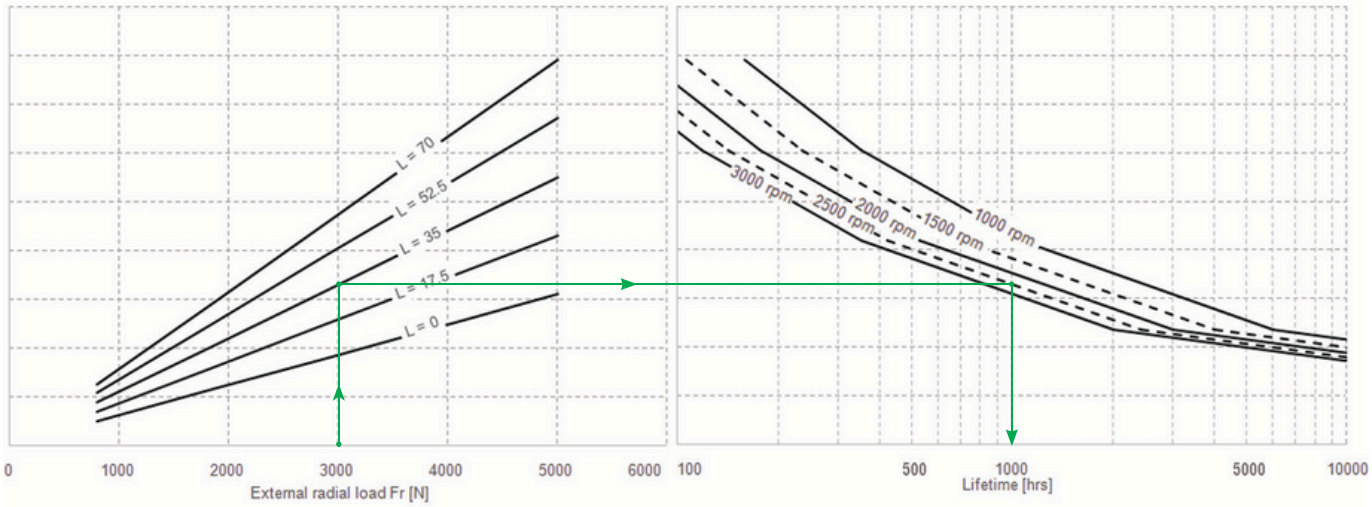

For Code CSB

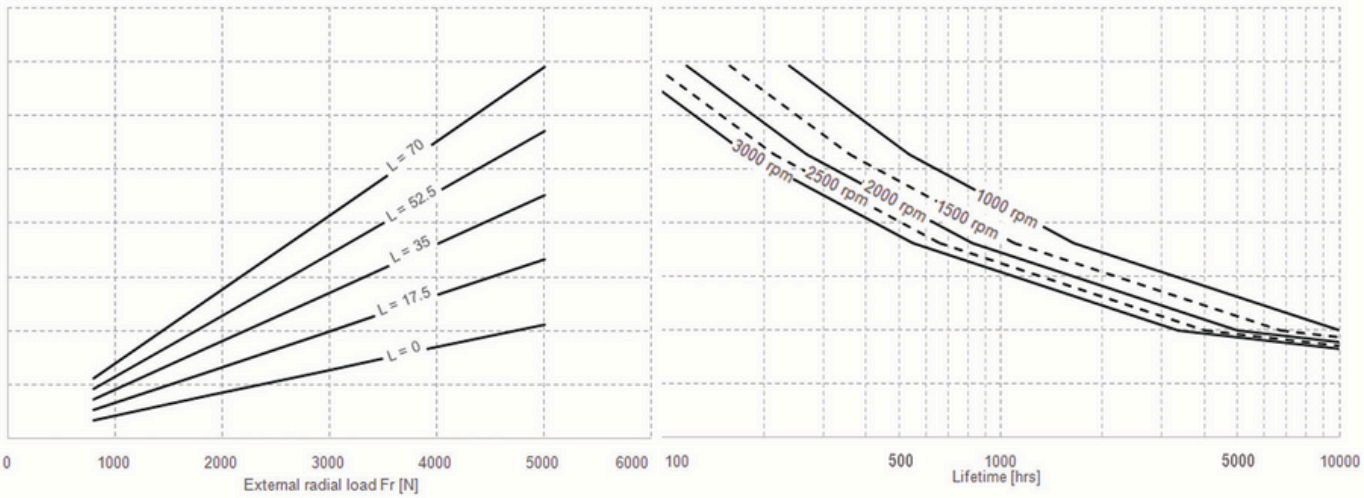

E0.130.0219.02.00IM04

MOUNTING FLANGES WITH BEARING

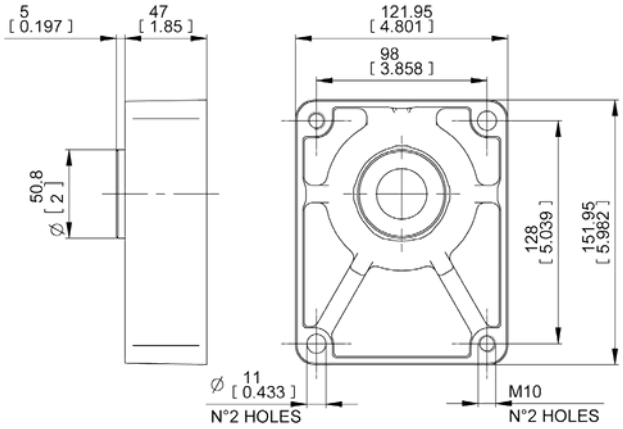

CP	**European standard** Ø50.8 mm
With shaft code 38	

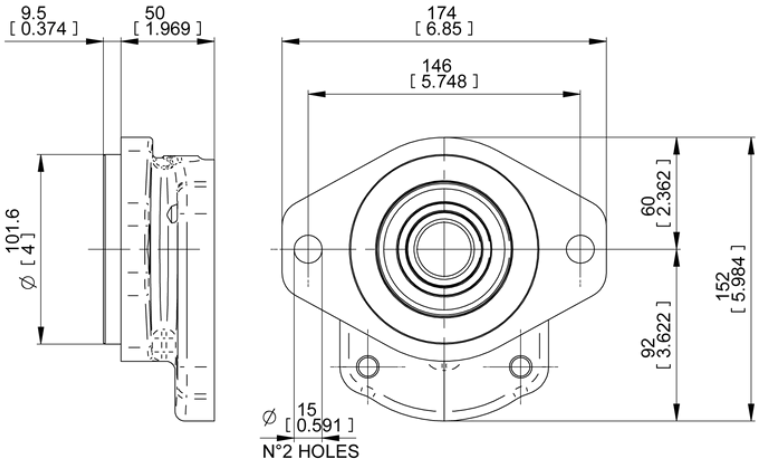

CSB	**SAE B**
With shaft code 55-56-87-88	

E0.130.0219.02.00IM04

REAR COVER

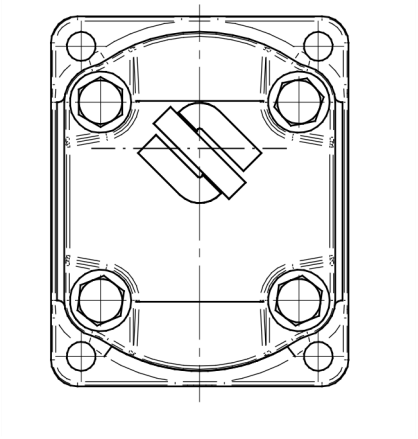

Standard rear cover
for unidirectional pumps

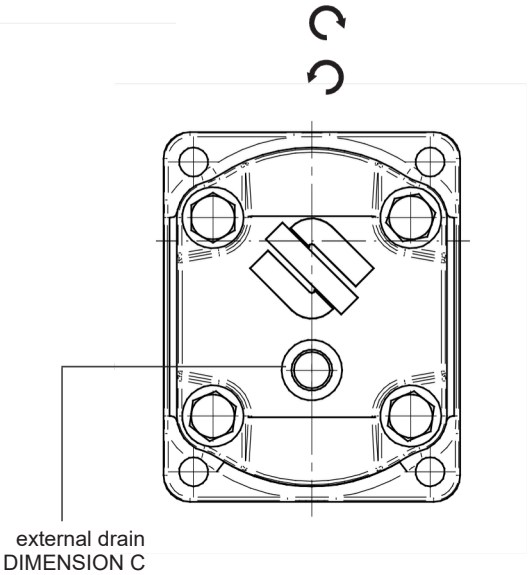

Standard rear cover
for reversible pumps, with external drain C.
For the dimension C please see the table here below

C
G3/8
9/16-18 UNF-2B (SAE6)

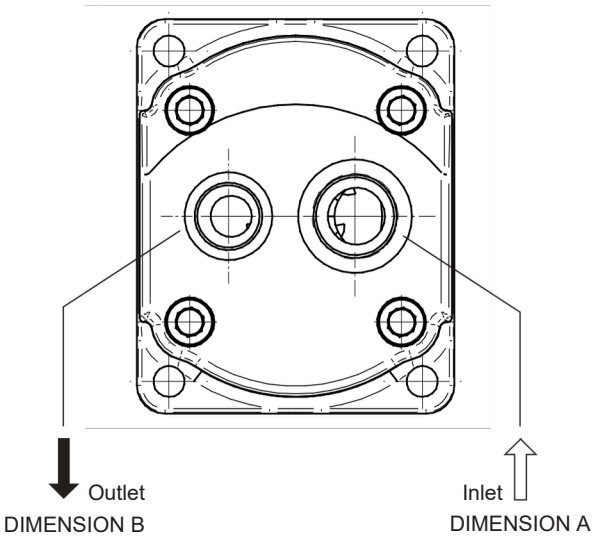

code 1

For pumps with threaded rear ports, suitable up to 80 l/min delivery.

A	B
G1	G3/4
1-5/16-12 UN-2B (SAE16)	1-1/16-12 UN-2B (SAE12)

E0.130.0219.02.00IM04

PRIORITY VALVES

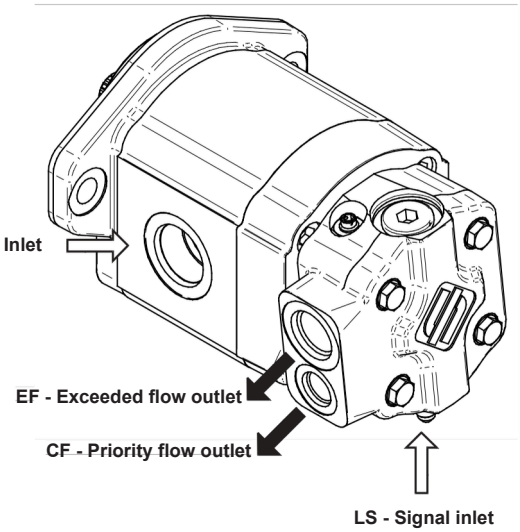

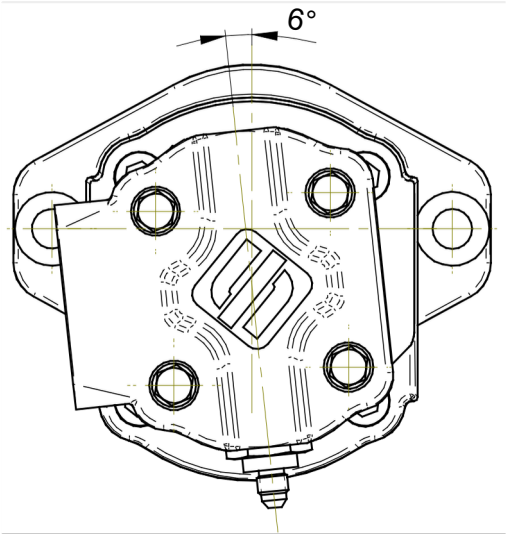

The double or triple pumps can be configurated with priority flow valve too.
The stage which has its flow divided into priority and exceeded flows is always the back one.

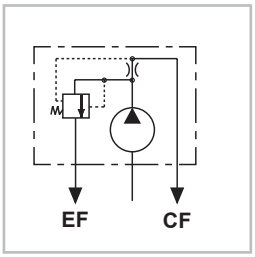

code VP1

Priority flow valve, excess flow to second actuator.

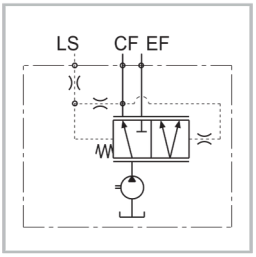

code VPD1

Load sensing priority valve with dynamic signal without main relief valve.

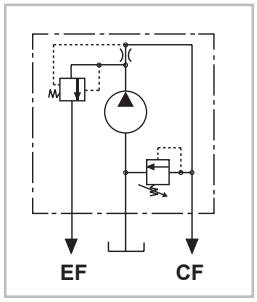

code VPS1

Priority flow valve, excess flow to second actuator with pressure relief valve on priority flow line.

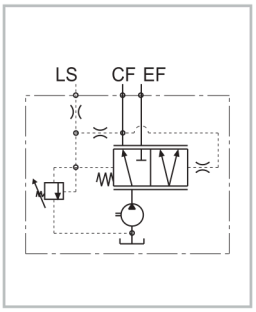

code VPDS1

Load sensing priority valve with dinamic signal with main relief valve.

CF = Priority flow port
EF = Excess flow port
LS = Load sensing signal port

E0.130.0219.02.00IM04

VP1 - VPS1
SIDE PORTS

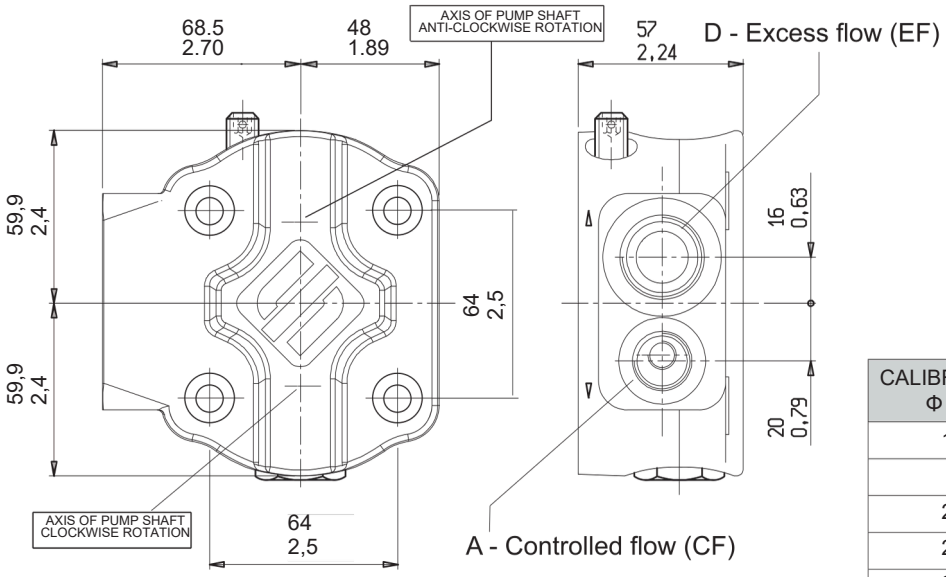

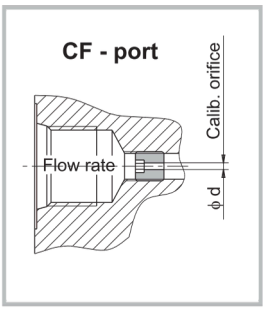

CALIBRATED ORIFICE Φ d (mm/*inch*)	FLOW RATE (l/min - gpm) ± 10%
1.5 /*(0.06")*	2.5 - *(0.66)*
2 /*(0.08")*	4 - *(1.06)*
2.4 /*(0.09")*	6 - *(1.59)*
2.8 /*(0.11")*	8 - *(2.11)*
3.1 /*(0.12")*	10 - *(2.64)*
3.5 /*(0.14")*	12.5 - *(3.30)*
4 /*(0.16")*	16 - *(4.23)*
4.4 /*(0.17")*	20 - *(5.28)*
4.9 /*(0.19")*	25 - *(6.61)*

VPD1 - VPDS1
SIDE PORTS

A	D
G 3/8	G 3/4
SAE8 3/4-16 UNF-2B	SAE12 1 1/16 - 12 UN - 2B

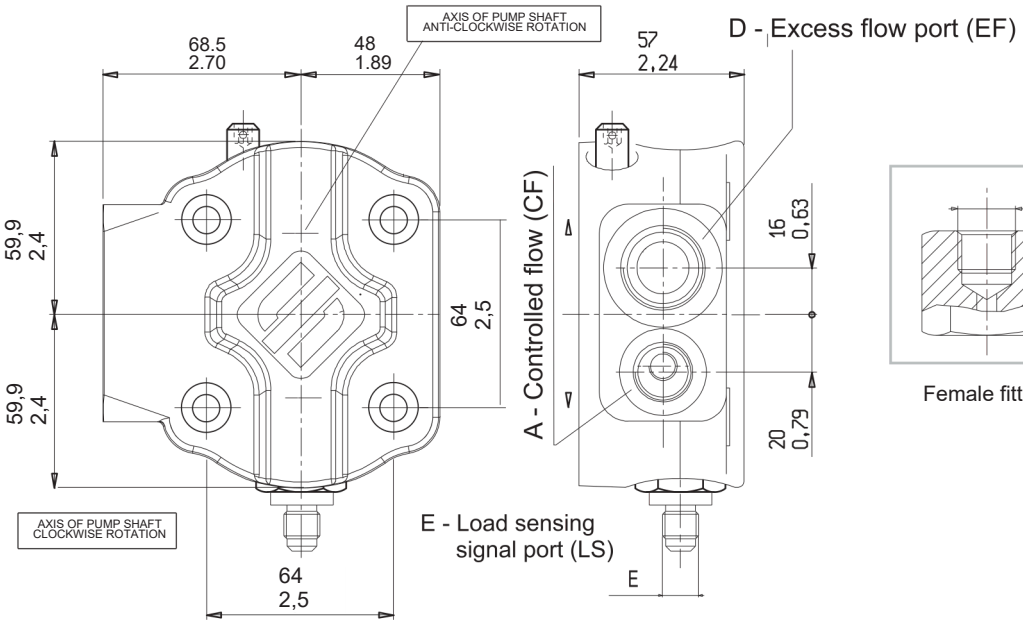

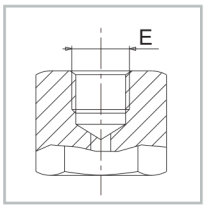

Female fitting

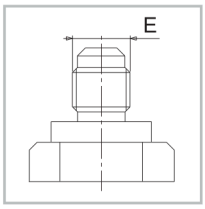

Male fitting

Minimum load sensing signal
(LS) = 4 bar (28 psi)

A	D	E
G 3/8	G 3/4	G 1/4
SAE8 3/4 - 16 UNF - 2B	SAE12 1-1/16 - 12 UN - 2B	SAE4 7/16 - 20 UNF - 2B

E0.130.0219.02.00IM04

MULTIPLE GEAR PUMPS ASSEMBLING DIMENSIONS

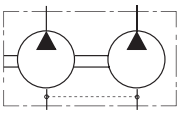

MULTIPLE GEAR PUMPS with inlet port on each body

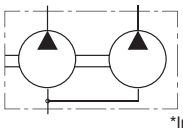

MULTIPLE GEAR PUMPS with common inlet port*

*In case of common inlet port, to avoid too high value of oil speed, 60 l/min is the max sucked flow for the downstream pump. Commercial code **UA**.

Type		21*	27	33	38	46	55	65	75*
Displacement	cm³/rev cu.in./rev	20.6 *1.26*	27 *1.65*	33.5 *2.04*	38.7 *2.36*	46.9 *2.86*	54.1 *3.3*	63.1 *3.85*	73.4 *4.48*
Dimension A	mm in	74 *2.91*	79 *3.11*	84 *3.31*	88 *3.46*	104 *4.09*	110 *4.33*	117 *4.61*	124 *4.88*
Dimension C	mm in	37 *1.46*	39.5 *1.56*	42 *1.65*	44 *1.73*	52 *2.05*	55 *2.17*	58.5 *2.30*	62 *2.44*

*Displacements 21 and 75 are special release, please contact sales department.

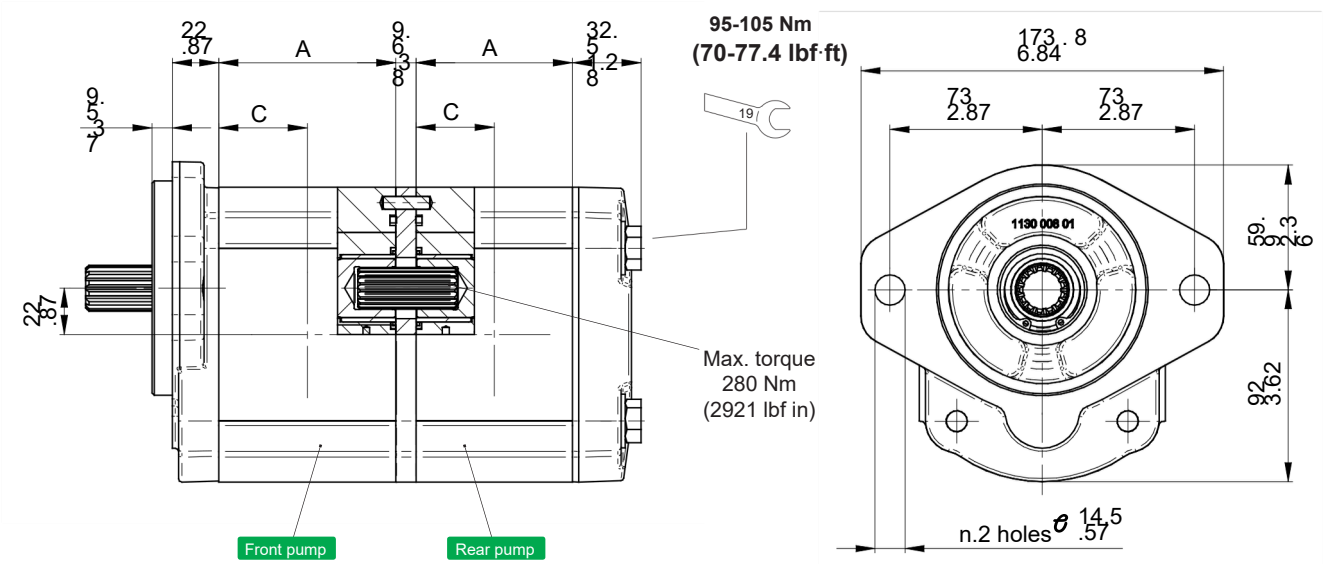

This is a Salami standard pump, alla drive shafts have a splined end.

These units are pre-arranged for multiple pumps, they have the drive shaft code 65.

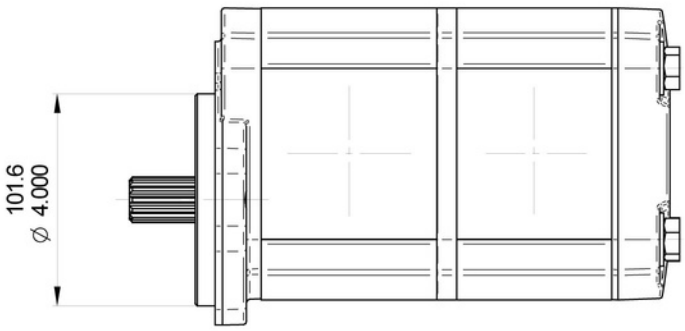

E0.130.0219.02.00IM04

3PE COMBINATION WITH PUMP 2PE

PD2 Kit multiple pumps
Pre-arranged for 2PE rear

ALL THE PUMPS CAN BE ALSO MULTIPLE

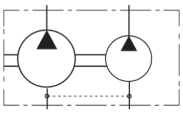

MULTIPLE GEAR PUMPS with inlet port on each body

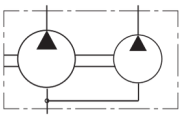

MULTIPLE GEAR PUMPS with common inlet port*

*In case of common inlet port, to avoidtoohigh value of oil speed, 30 l/min is the max. sucked flow for the downstream pump.
Commercial code **UA**.

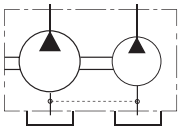

MULTIPLE GEAR PUMPS with separated stages

code AS

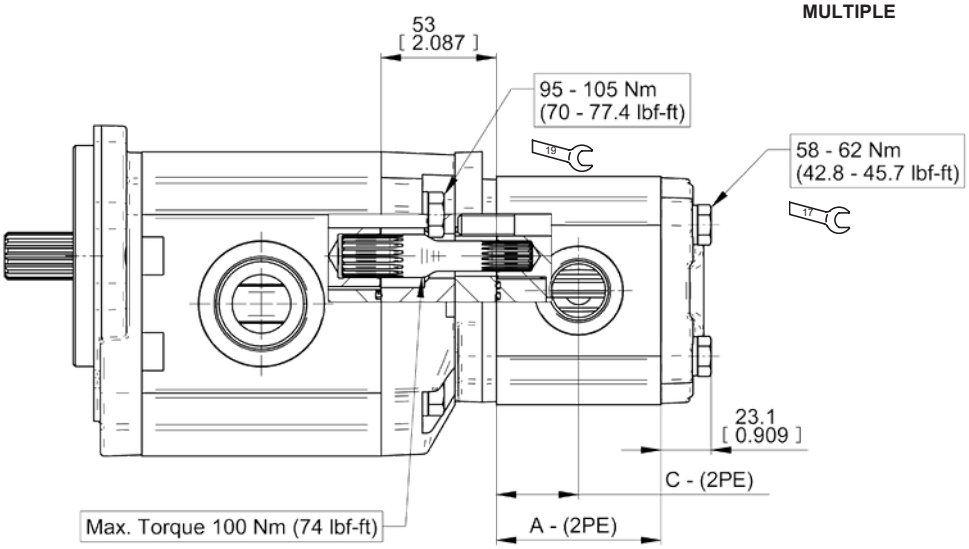

2PE-Type		3.2*	3.9*	4.5	6.5	8.3	10.5	11.3	12.5	13.8	16	19	22.5	26
Dimension A - 2PE	mm	47.1			49.95	52.8	56.3	59.7		63.5	67.5	75.6	81	86.8
	in	*1.83*			*1.97*	*2.07*	*2.22*	*2.35*		*2.5*	*2.65*	*2.97*	*3.19*	*3.42*
Dimension C - 2PE	mm	23.55			25	26.4	28.15	29.75		31.75	33.75	37.80	40.5	43.4
	in	*0.93*			0.98	*1.04*	*1.11*	*1.17*		*1.25*	*1.33*	*1.49*	*1.59*	*1.71*

*Available only as rear pump

3PE COMBINATION WITH PUMP 1.5PE

PD1.5 Kit multiple pumps
Pre-arranged for 1.5PE rear

ALL THE PUMPS CAN BE ALSO MULTIPLE

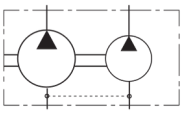

MULTIPLE GEAR PUMPS with inlet port on each body

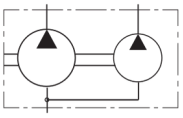

MULTIPLE GEAR PUMPS with common inlet port*

*In case of common inlet port, to avoidtoohigh value of oil speed, 12 l/min is the max. sucked flow for the downstream pump.
Commercial code **UA**.

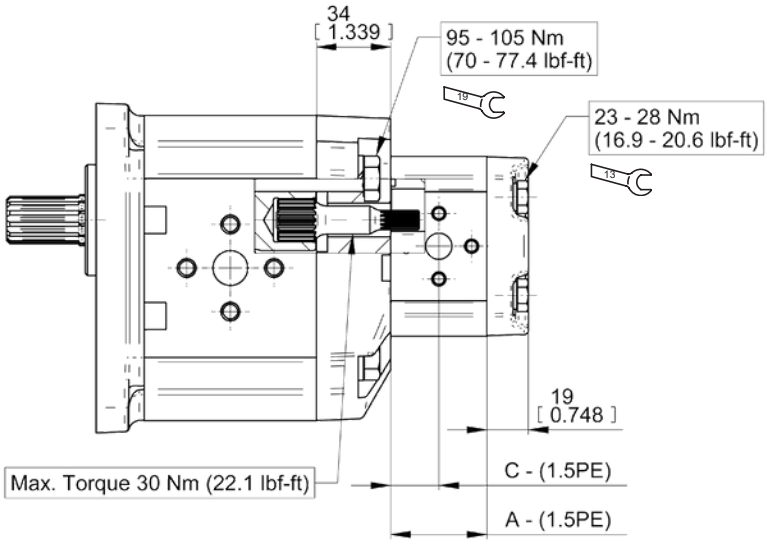

1.5PE-Type		1.4	2.1	2.8	3.5	4.1	5.2	6.2	7.6	9.3	11
Dimension A - 1.5PE	mm	44	45.9	47.9	49.9	51.6	54.7	57.5	61.5	66.3	71.1
	in	*1.73*	*1.81*	*1.89*	*1.96*	*2.03*	*2.15*	*2.26*	*2.42*	*2.61*	*2.80*
Dimension C - 1.5PE	mm	22	22.95	23.95	24.95	25.8	27.35	28.75	30.75	33.15	35.55
	in	*0.87*	*0.90*	*0.94*	*0.98*	*1.02*	*1.08*	*1.13*	*1.21*	*1.31*	*1.40*

E0.130.0219.02.00IM04

PERFORMANCE CURVES

Performance curvescarriedoutwithoilviscosityat21cStandoiltemperature at 50°C

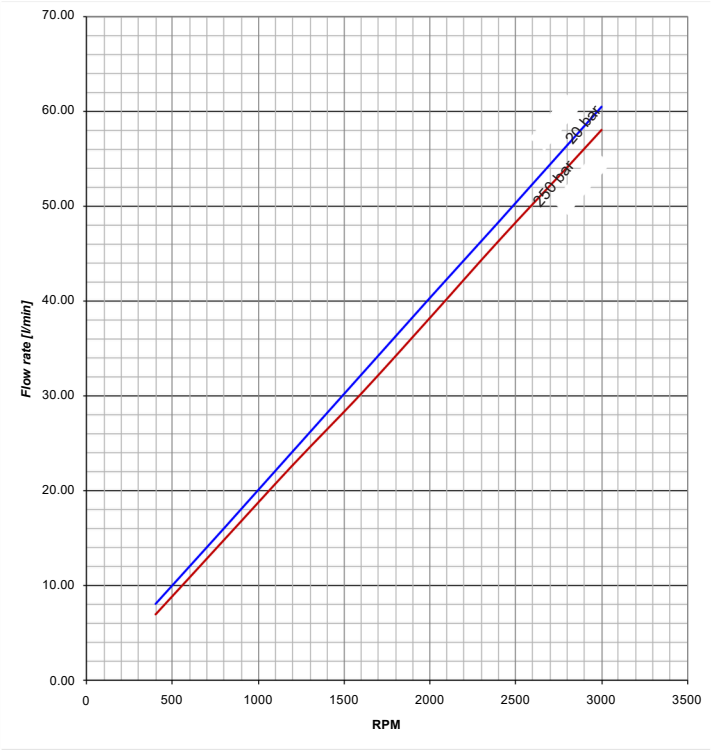

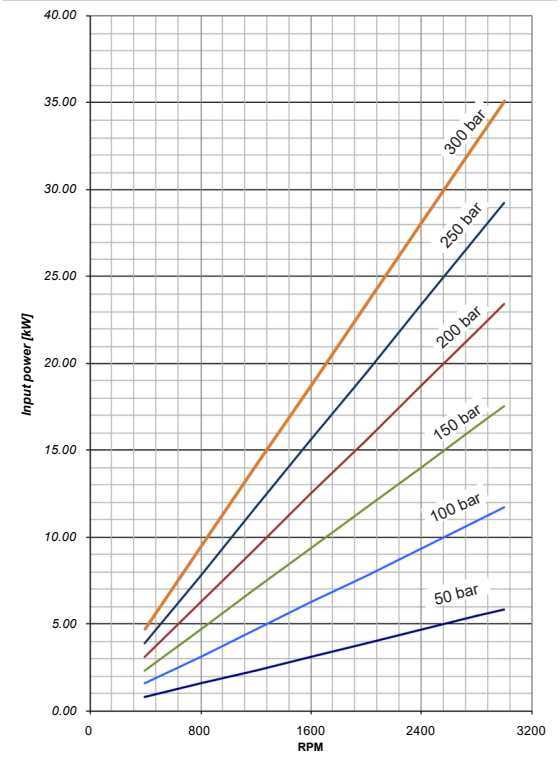

3PE-21

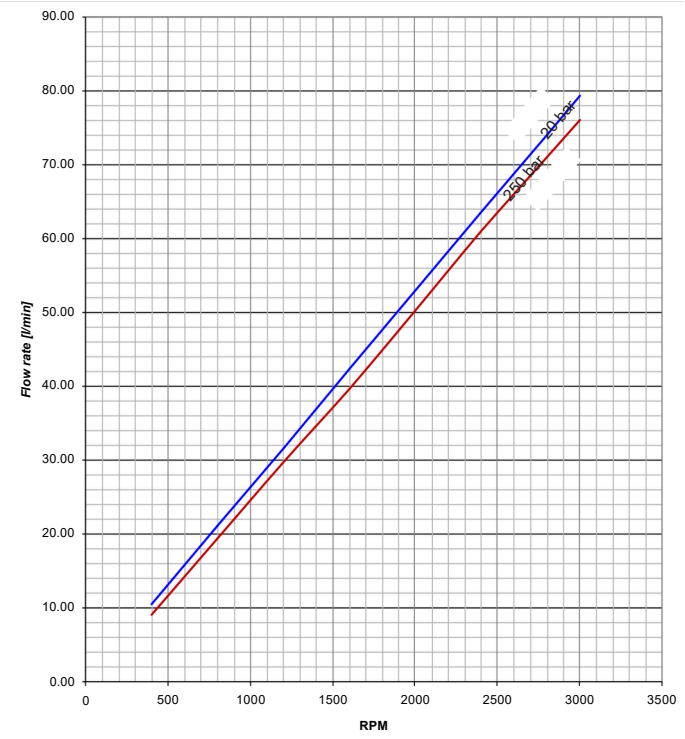

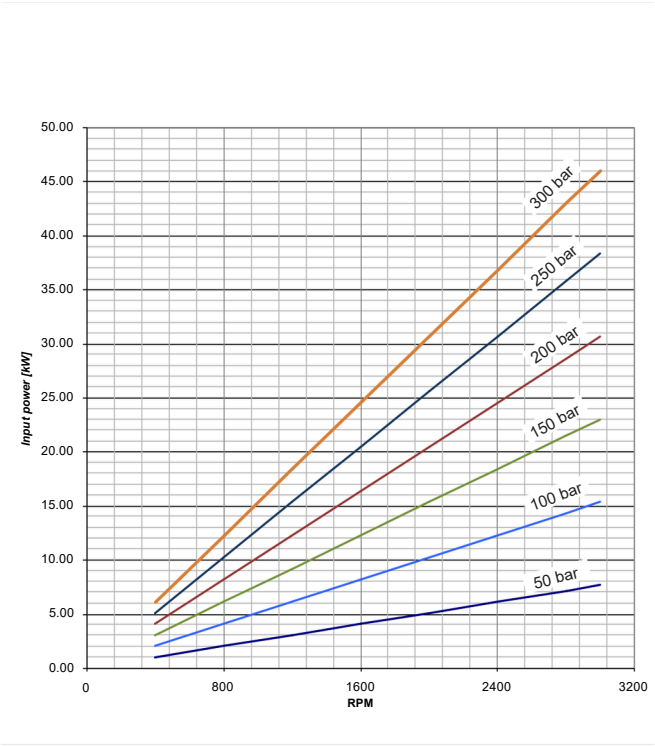

3PE-27

E0.130.0219.02.00IM04

PERFORMANCE CURVES

Performance curvescarriedoutwithoilviscosityat21cStandoiltemperature at 50°C

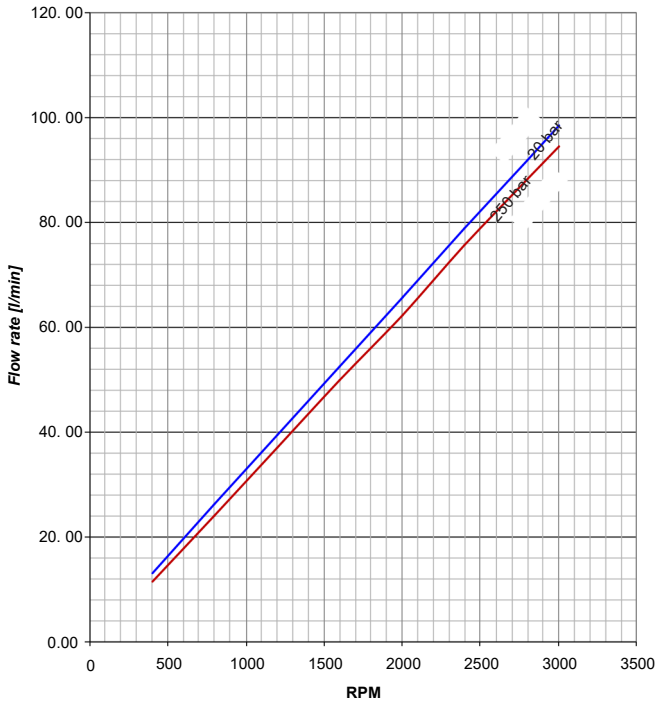

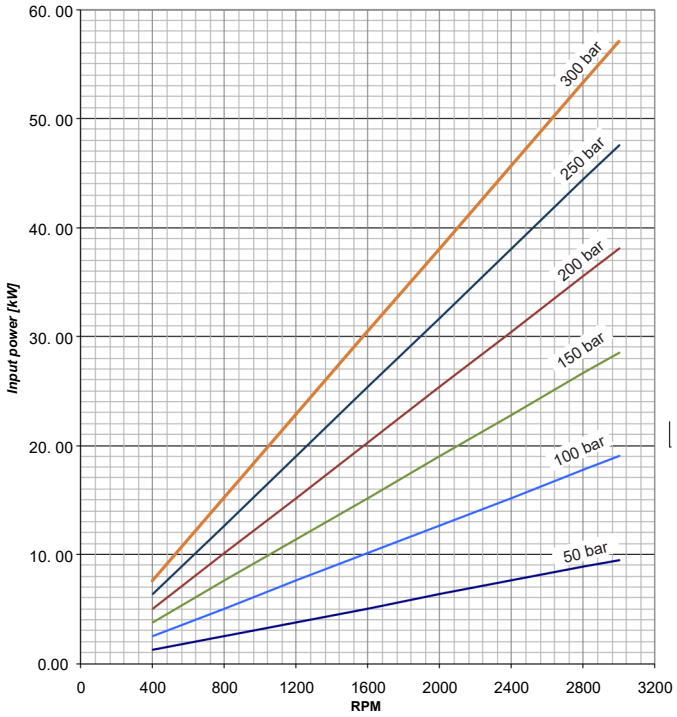

3PE-33

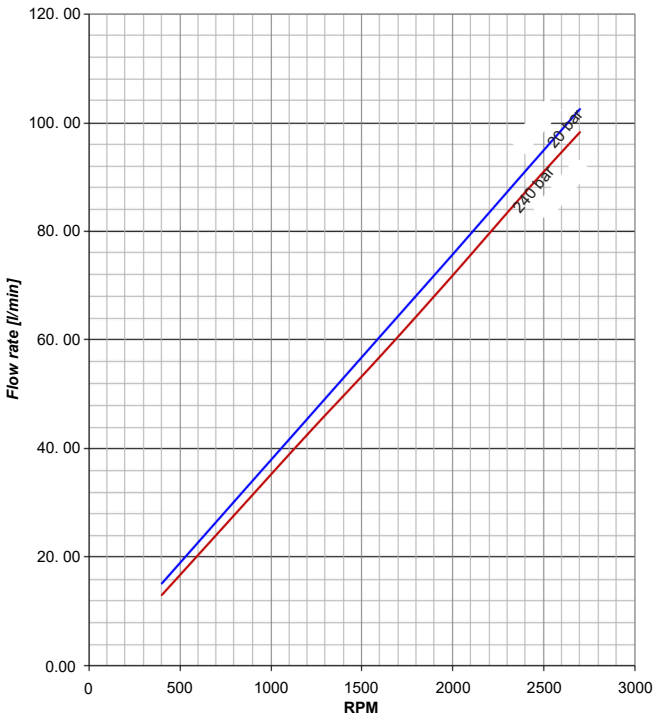

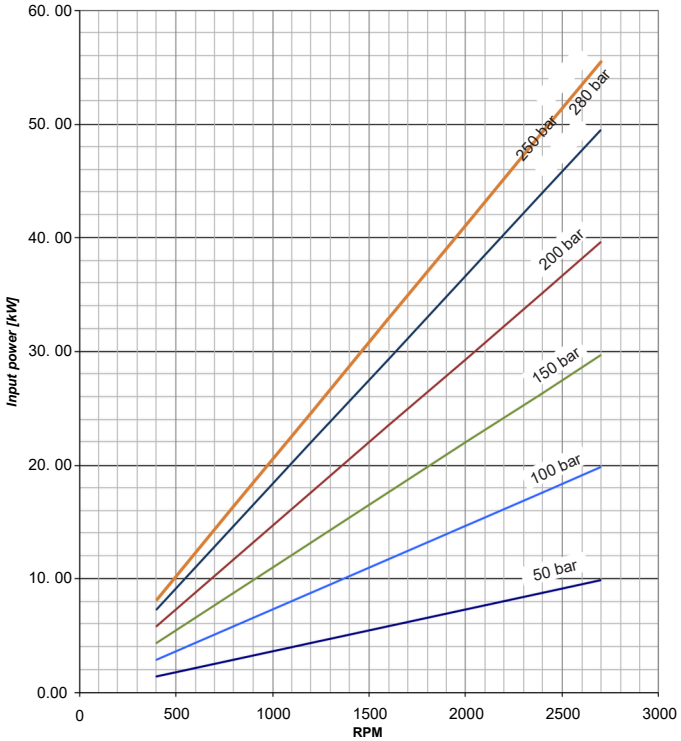

3PE-38

E0.130.0219.02.00IM04

PERFORMANCE CURVES

Performance curvescarriedoutwithoilviscosityat21cStandoiltemperature at 50°C

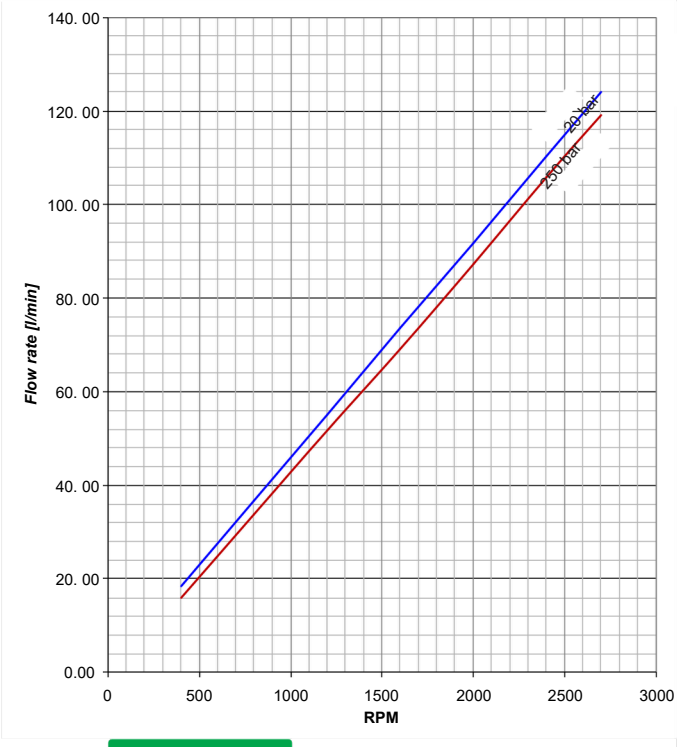

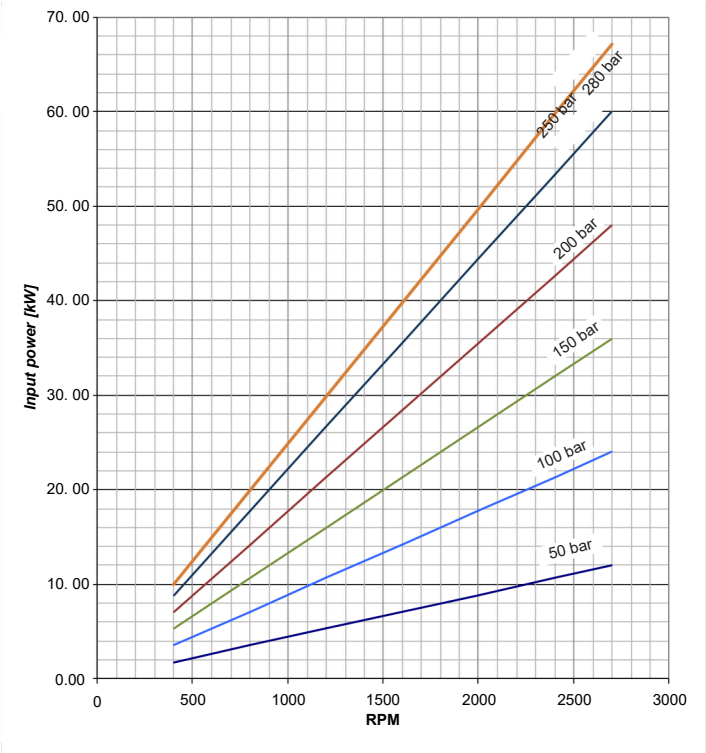

3PE-46

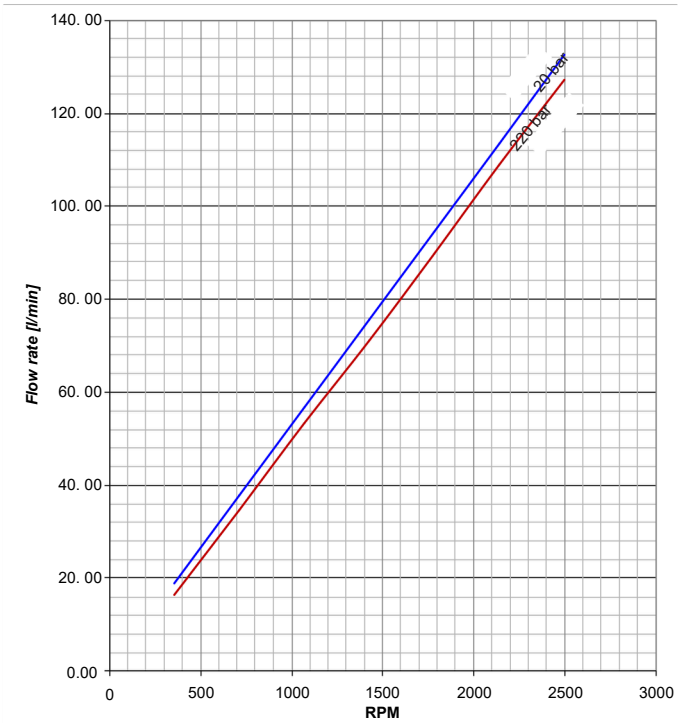

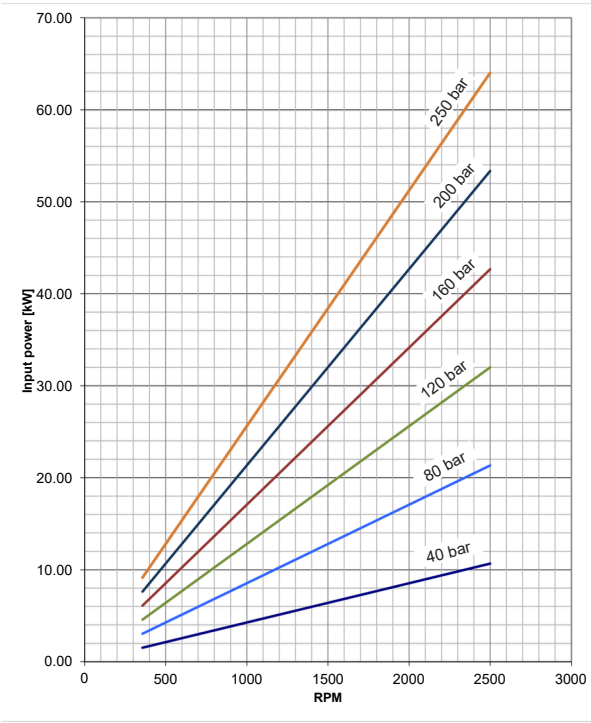

3PE-55

E0.130.0219.02.00IM04

PERFORMANCE CURVES

Performance curvescarriedoutwithoilviscosityat21cStandoiltemperature at 50°C

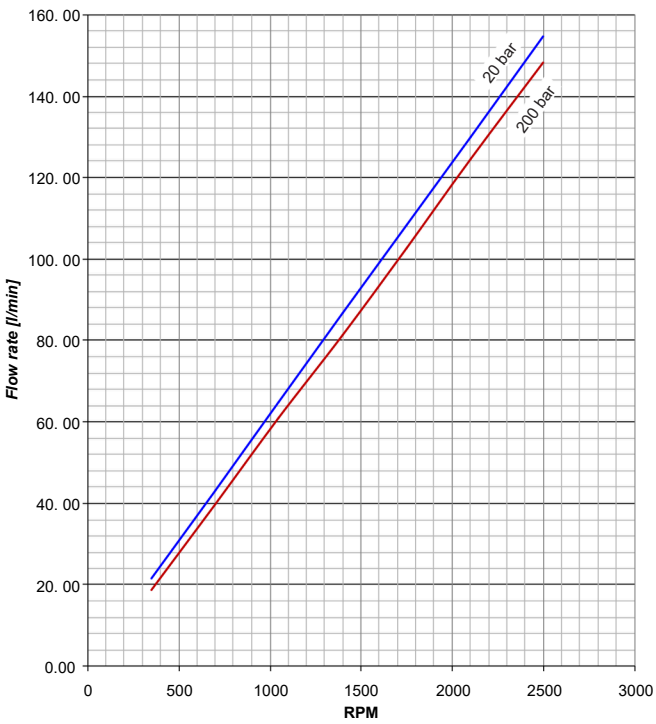

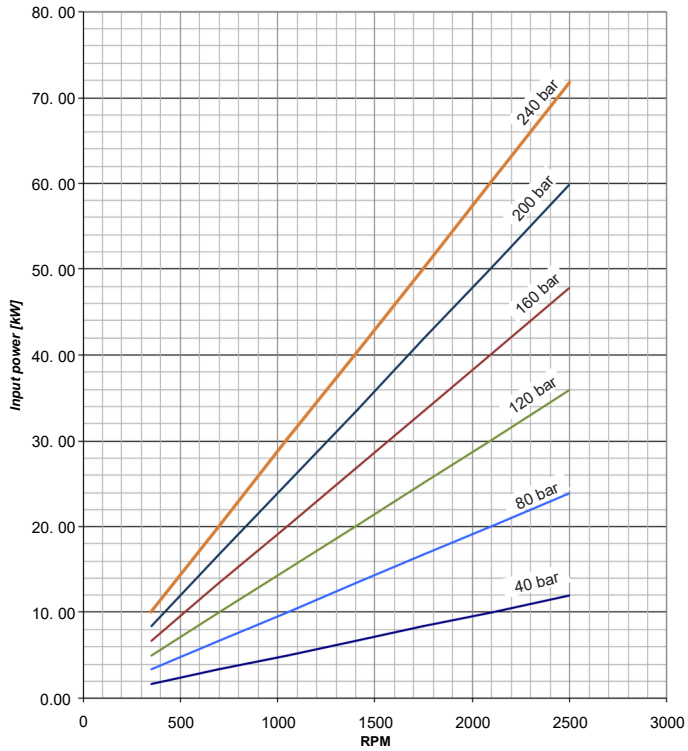

3PE-65

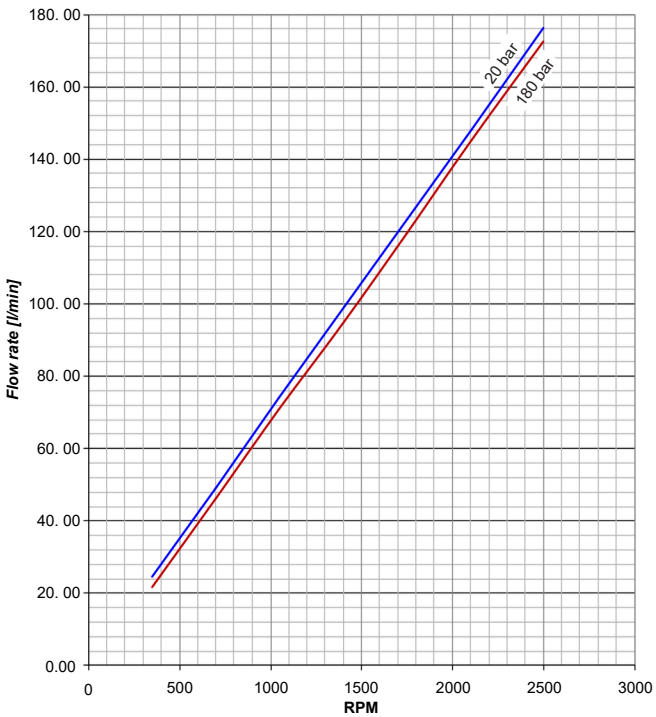

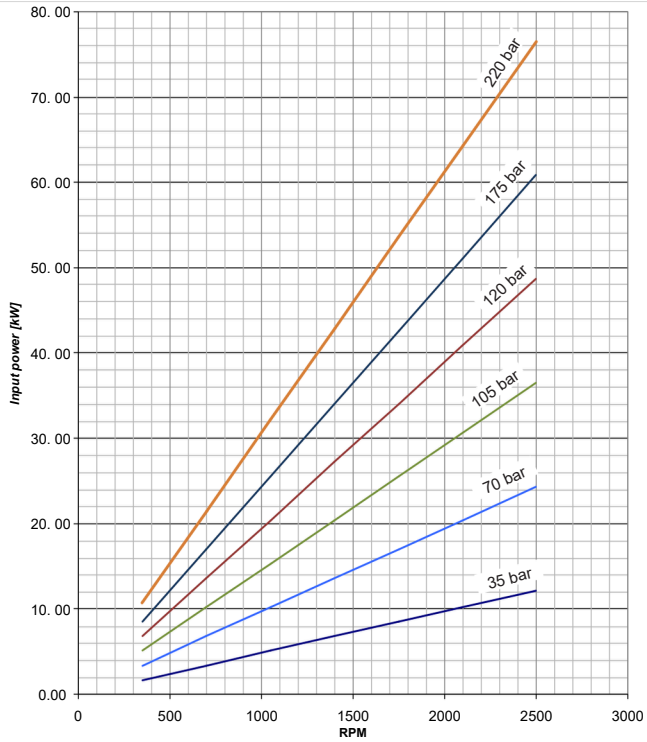

3PE-75

E0.130.0219.02.00IM04

SINGLE PUMPS

3PE	A	B	-	C	D	E	-	F	G	H	I	L	... / ...

Adjustable flow l/min

Setting main relief valve (bar)

DISPLACEMENTS		A CODES
20.6 cm³/rev.	*1.26 cu.in/rev.*	21
27 cm3/rev.	*1.65 cu.in/rev.*	27
33.5 cm3/rev.	*2.04 cu.in/rev.*	33
38.7 cm3/rev.	*2.36 cu.in/rev.*	38
46.9 cm3/rev.	*2.86 cu.in/rev.*	46
54.1 cm3/rev.	*3.3 cu.in/rev.*	55
63.1 cm3/rev.	*3.85 cu.in/rev.*	65
73.4 cm3/rev.	*4.48 cu.in/rev.*	75

ROTATION (page 6)	CODES B
Clockwise	D
Anti-clockwise	S
Reversible	R

PORTS (page 94)	CODES C
Flanged ports european standard	P
Flanged ports german standard	B
Threaded ports GAS (BSPP)	G
Threaded ports SAE (ODT)	R
Flanged ports SAE J518 AMERICAN STANDARD THREAD	S
Flanged ports SAE J518 METRIC THREAD	W

DRIVE SHAFT (page 96)	CODES D
Tang drive for electric motor	05
European Tapered 1:5	35
European Tapered 1:8	38
European Tapered 1:8	48
SAE B splined 13T	55
SAE BB splined 15T	56
DIN 5480 internal splined **(only for rear pumps- see page 103)**	65
SAE B parallel	87
SAE BB parallel	88

Order example: 3PE 46D, ports SAE (R), drive shaft (56), mountingflange (S3)
3PE46D-R56S3

L VALVES IN THE COVER (page 101)	CODES
Priority flow divider with excess flow to 2nd actuator	VP1
Like VP with main relief valve	VPS1
Priority flow divider with Load sensing with dinamic signal	VPD1
Load sensing priority valve with dinamic signal with main relief valve	VPDS1

I REAR COVER (page 104)	CODE
Pre-arranged for 1.5PE rear	PD1.5
Pre-arranged for 2PE rear	PD2

H OUTRIGGER BEARING (page 98)	CODES
European standard	CP
German standard	CSB

G PORTS POSITION	CODE
Lateral ports standard	
Rear ports (page)	1

F SEAL	CODE
Buna standard	
Viton	V

E MOUNTING FLANGES (page 97)	CODES
SAE B 2 Bolts	S3
European standard Ø50.8	P2
European standard Ø60.3	P3
German standard Ø105	B6

E0.130.0219.02.00IM04

MULTIPLE PUMPS

3PE	A	B	C	D	E	F	G	H	I	L	M	/ ...

Adjustable flow l/min

Setting main relief valve (bar)

DISPLACEMENTS		A CODES
20.6 cm³/rev.	*1.26 cu.in/rev.*	21
27 cm3/rev.	*1.65 cu.in/rev.*	27
33.5 cm3/rev.	*2.04 cu.in/rev.*	33
38.7 cm3/rev.	*2.36 cu.in/rev.*	38
46.9 cm3/rev.	*2.86 cu.in/rev.*	46
54.1 cm3/rev.	*3.3 cu.in/rev.*	55
63.1 cm3/rev.	*3.85 cu.in/rev.*	65
73.4 cm3/rev.	*4.48 cu.in/rev.*	75

ROTATION (page 6)	CODES B
Clockwise	D
Anti-clockwise	S

PORTS (page 94)	CODES C
Flanged ports european standard	P
Flanged ports german standard	B
Threaded ports GAS (BSPP)	G
Threaded ports SAE (ODT)	R
Flanged ports SAE J518 AMERICAN STANDARD THREAD	S
Flanged ports SAE J518 METRIC THREAD	W

DRIVE SHAFT (page 96)	CODES D
Tang drive for electric motor	05
European Tapered 1:5	35
European Tapered 1:8	38
European Tapered 1:8	48
SAE B splined 13T	55
SAE BB splined 15T	56
SAE B parallel	87
SAE BB parallel	88

Order example: 3PE 33/27D, ports SAE (P), drive shaft (56), mountingflange (S3)
3PE33/27D-R56S3

M VALVES IN THE COVER (page 101)	CODES
Priority flow divider with excess flow to 2nd actuator	VP1
Like VP with main relief valve	VPS1
Priority flow divider with Load sensing with dinamic signal	VPD1
Load sensing priority valve with dinamic signal with main relief valve	VPDS1

L REAR COVER (page 104)	CODE
Pre-arranged for 1.5PE rear	PD1.5
Pre-arranged for 2PE rear	PD2

I OUTRIGGER BEARING (page 98)	CODES
European standard	CP
German standard	CSB

H PORTS POSITION	CODE
Lateral ports standard	
Rear ports (page)	1

G SUCTION PORTS	CODES
Common suction	UA*
Separeted stages	AS

F SEAL	CODE
Buna standard	
Viton	V

E MOUNTING FLANGES (page 97)	CODES
SAE B 2 Bolts	S3
European standard Ø50.8	P2
European standard Ø60.3	P3
German standard Ø105	B6

*UA: this type of multiple pump is a Salami standard multiple pump which has only one inlet port opened, all the other inlet port are closed.
In case of common suction, the code 1 - 2 or 3, correspond to the body where inlet is located.

E0.130.0219.02.00IM04

SALAMI S.P.A.
Via EmiliaOvest 1006
41123 Modena (Italy)
Ph. +39 059 387 411
F. +39 059 387 639
sales@salami.it

SALAMI FRANCE
22,rue Louis Saillant
69120 Valux en Velin
Lyon
Ph. +33-04-78809941
F. +33-04-78803669
e.pasian@salami.fr

SALAMI ESPAÑA
Poligono Industrial Armenteres C/Primer de Maig, 18, Nave 4 08980 San Feliu de Llobregat Barcelona Ph. +34-93-6665451 F. +34-93-6667826 info@salamispain.com

SALAMI HYDRAULICS N.A INC
4630 Crossroads Park Drive
Liverpool
NY 13088 - USA
Ph. +1-315-295-2363
F. +1-315-295-2364
info@salamihydraulics.com